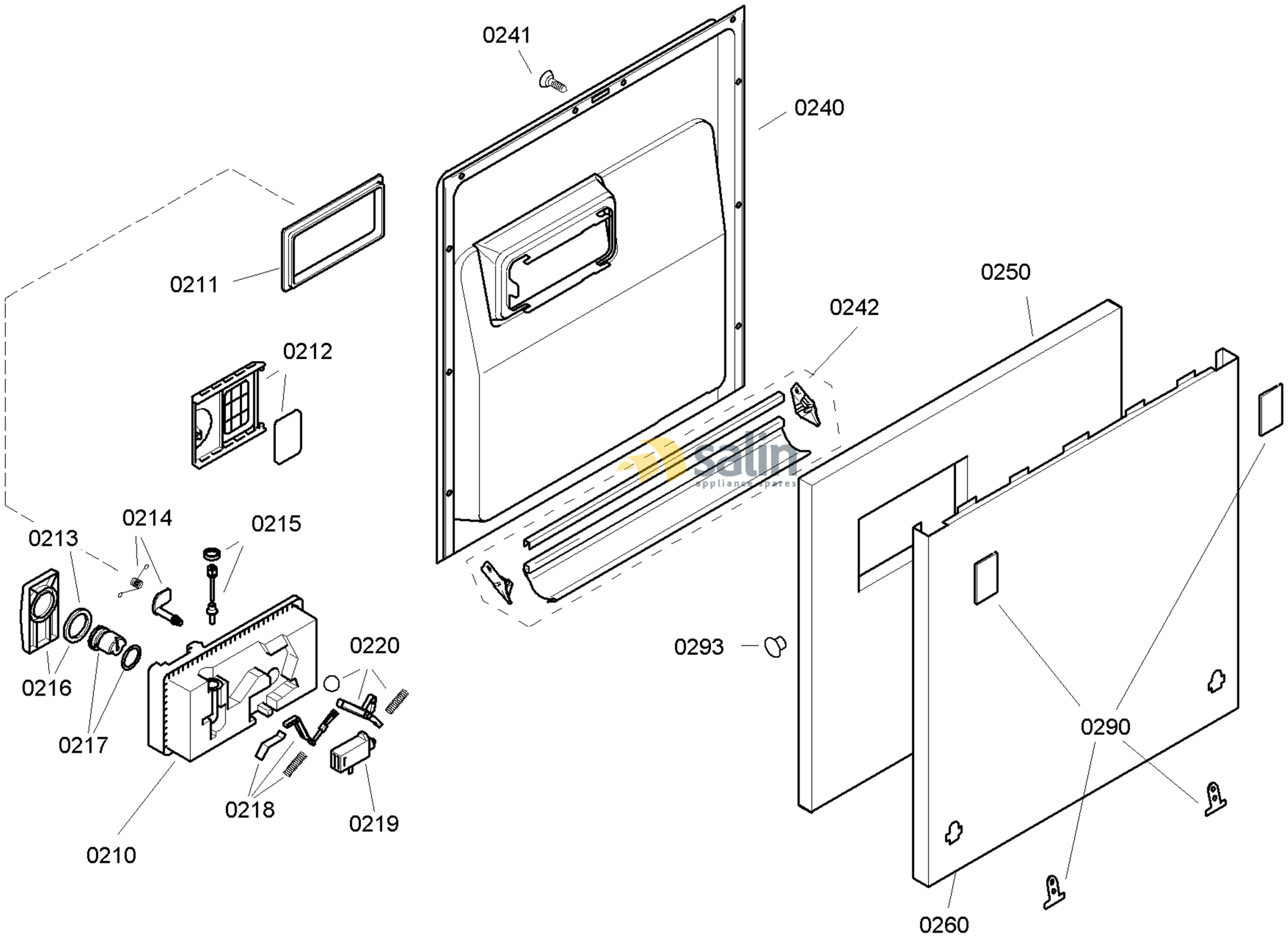

58300000119699 aet 000 c 2/6

FAMILY : SGI45M85EU
MODEL NO: SGI45M85EU/73
Check Position No/Part No or Replacement No

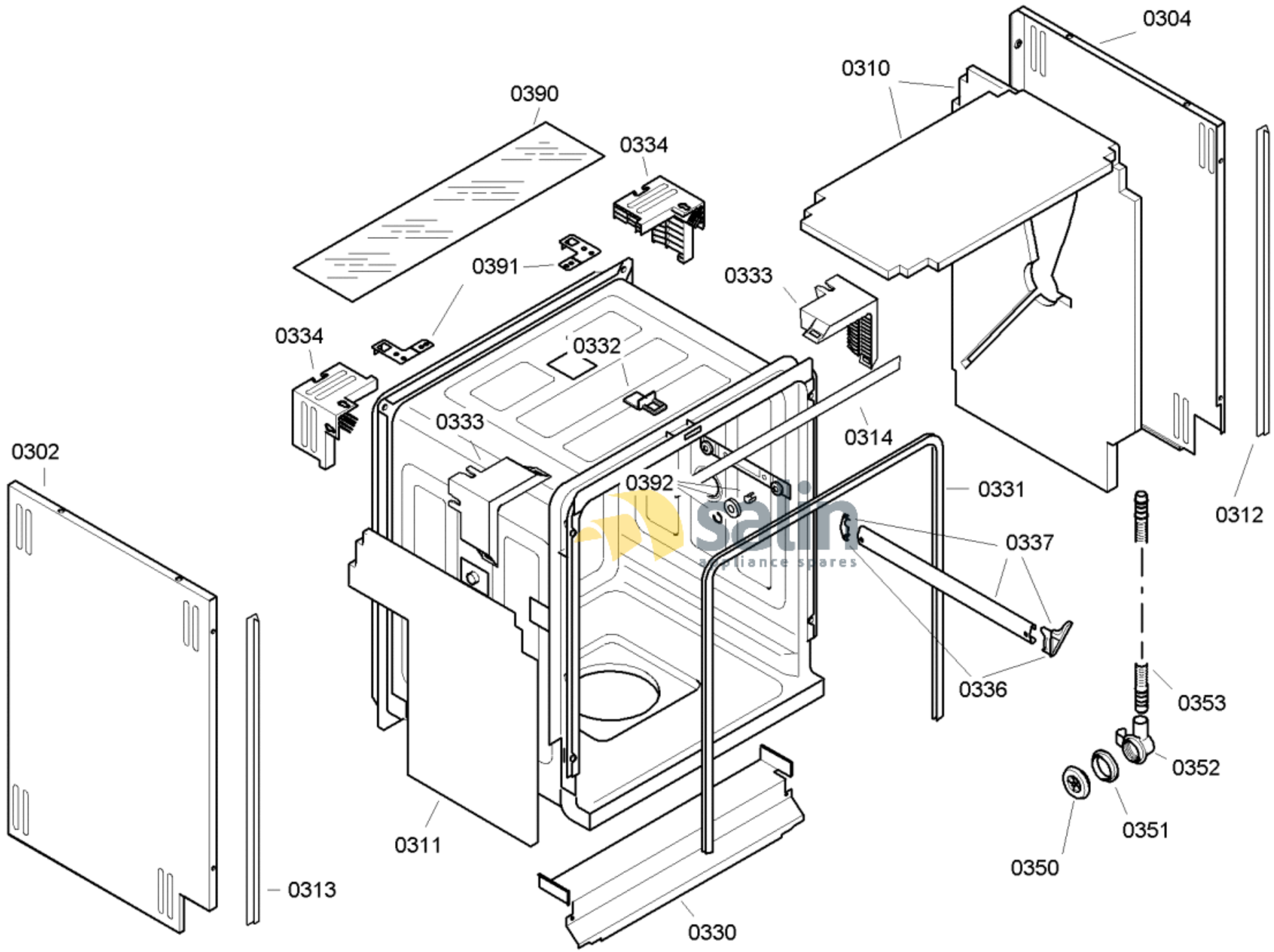

58300000119699 aet 000 c 3/6

FAMILY : SGI45M85EU

MODEL NO: SGI45M85EU/73

Check Position No/Part No or Replacement No

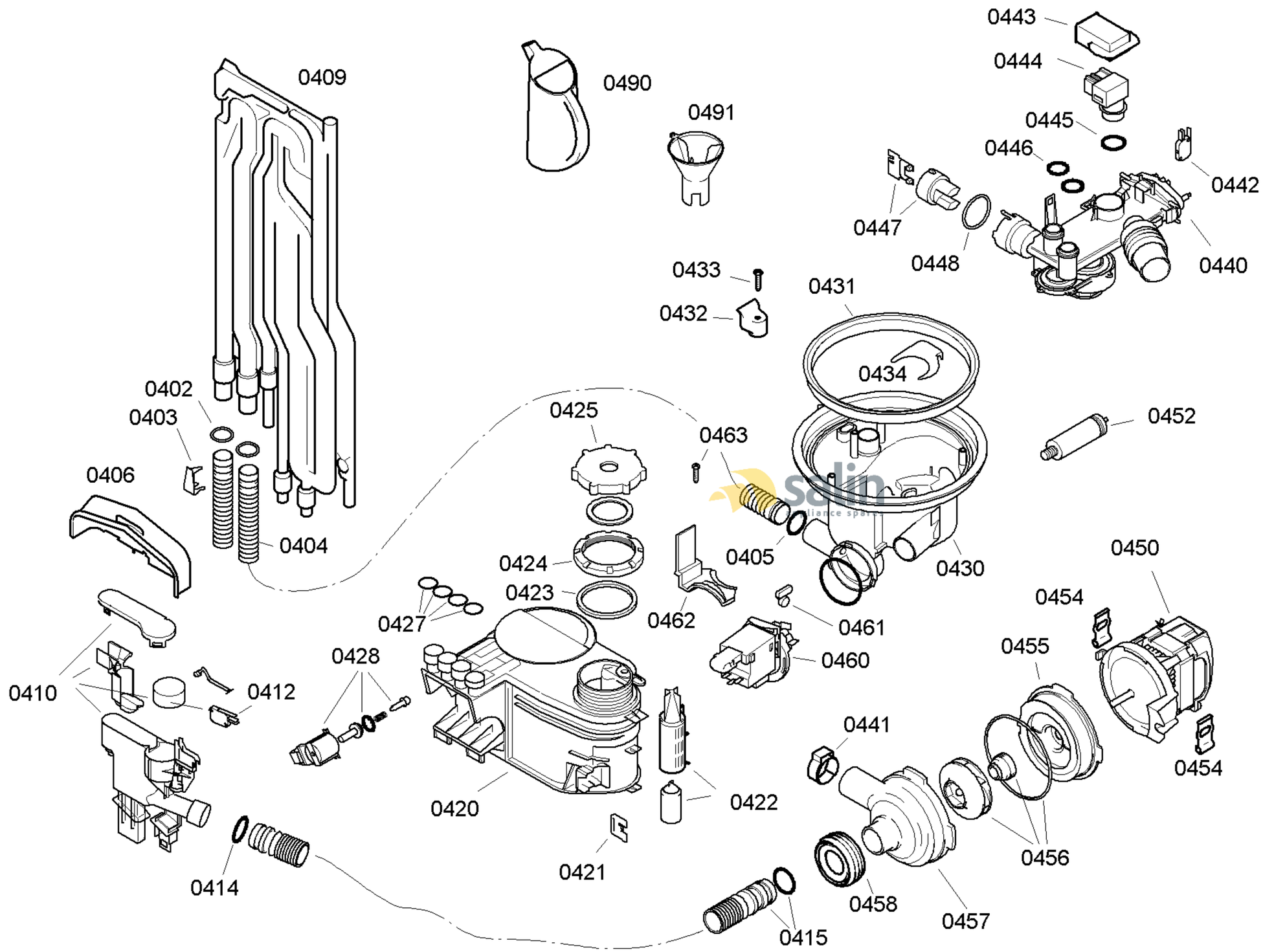

58300000119699 aet 000 c 4/6

FAMILY : SGI45M85EU
MODEL NO: SGI45M85EU/73
Check Position No/Part No or Replacement No

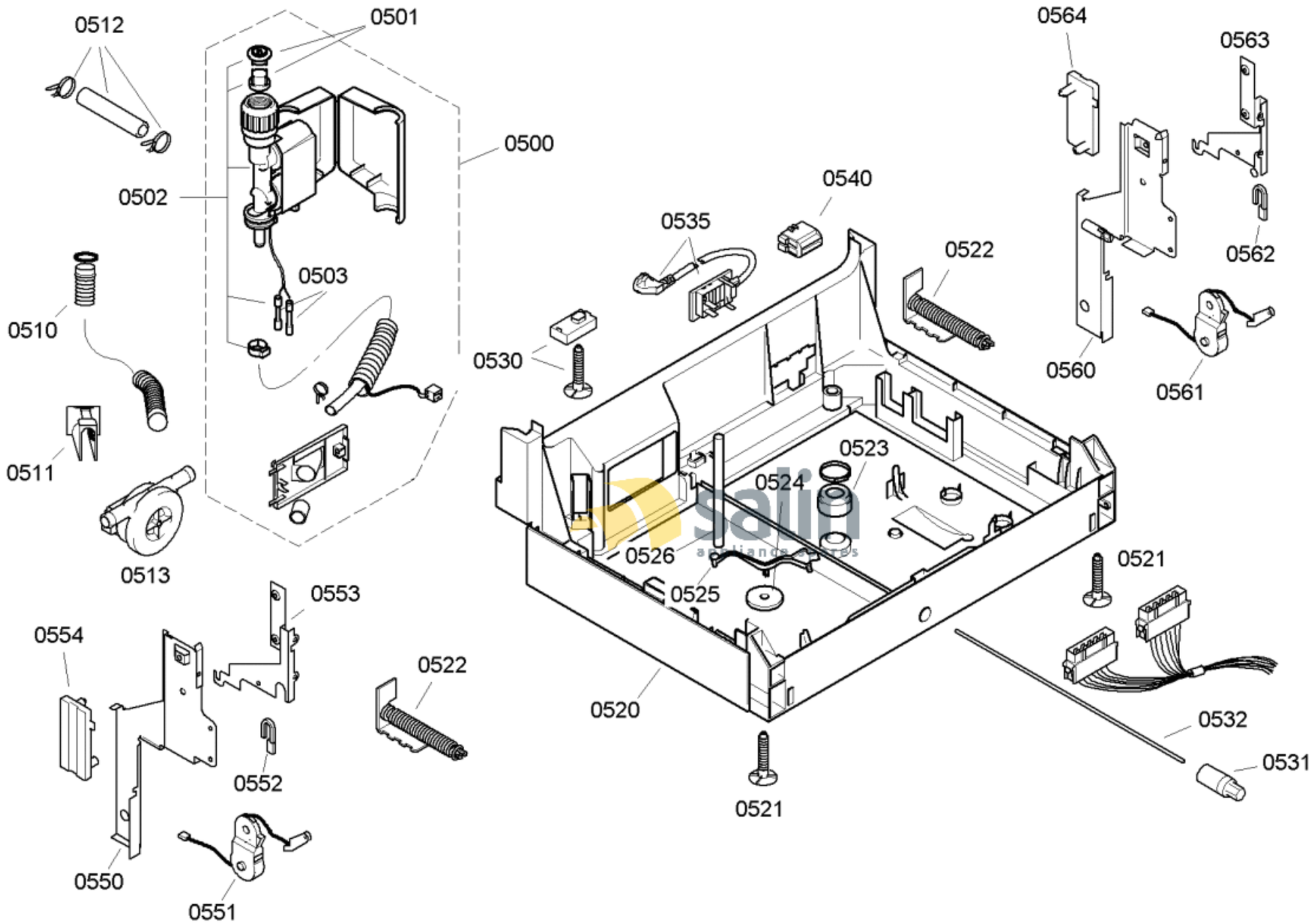

58300000119699 aet 000 c 5/6

FAMILY : SGI45M85EU

MODEL NO: SGI45M85EU/73

Check Position No/Part No or Replacement No

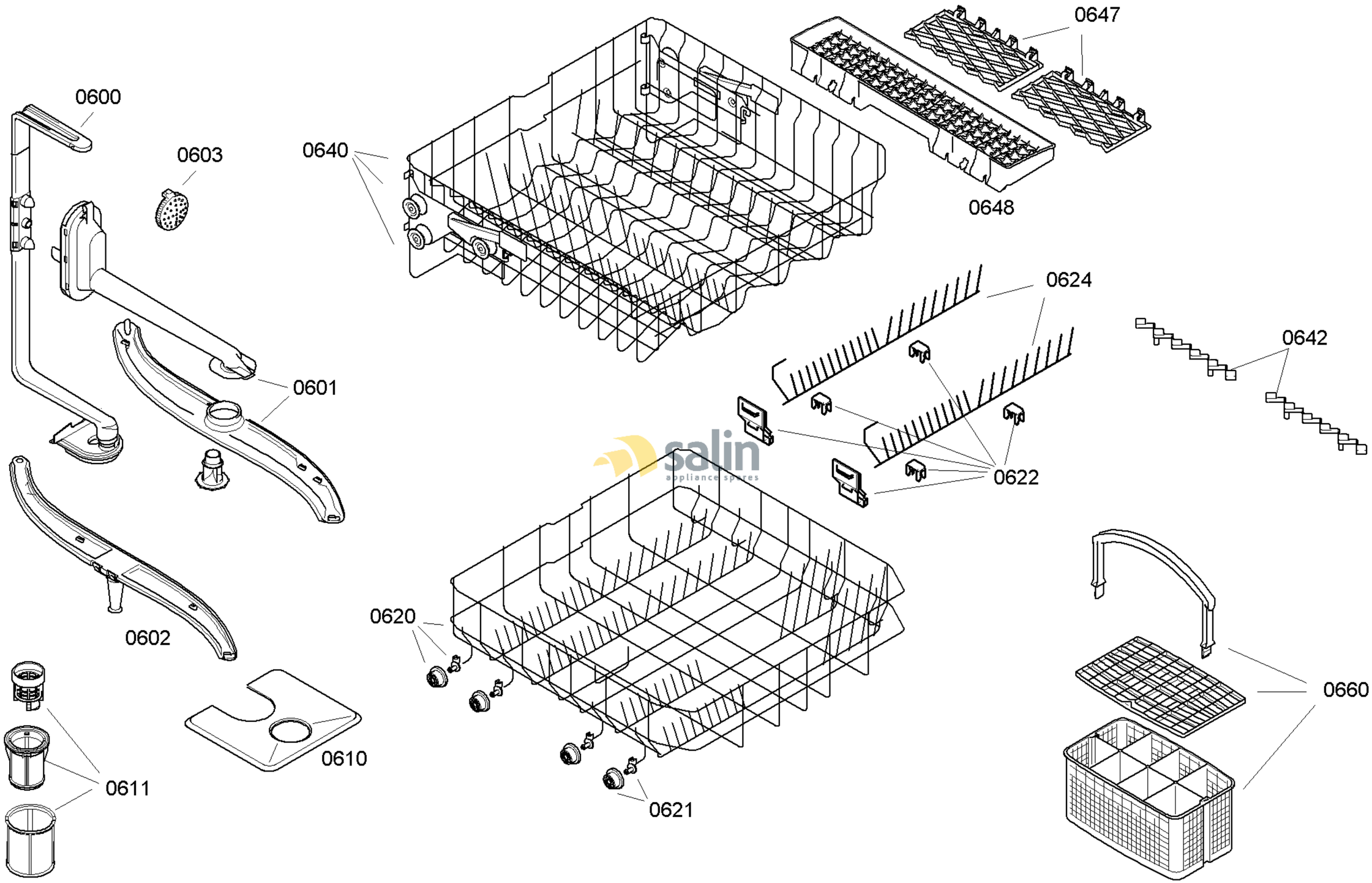

58300000119699 aet 000 c 6/6

FAMILY : SGI45M85EU
MODEL NO: SGI45M85EU/73
Check Position No/Part No or Replacement No