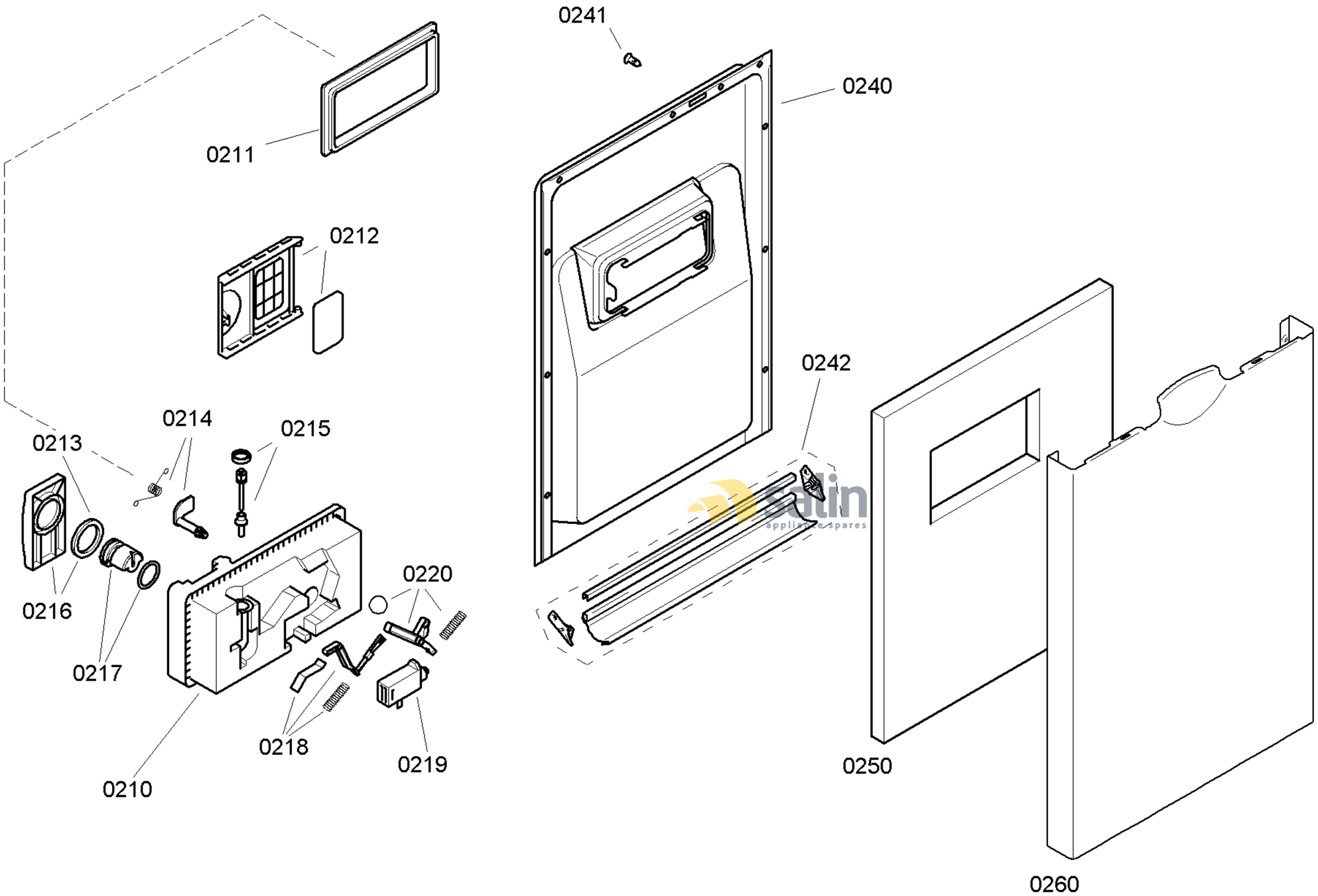

58300000138188 aet 000 a 2/6

FAMILY : SRS43E42EU
MODEL NO: SRS43E42EU/13
Check Position No/Part No or Replacement No

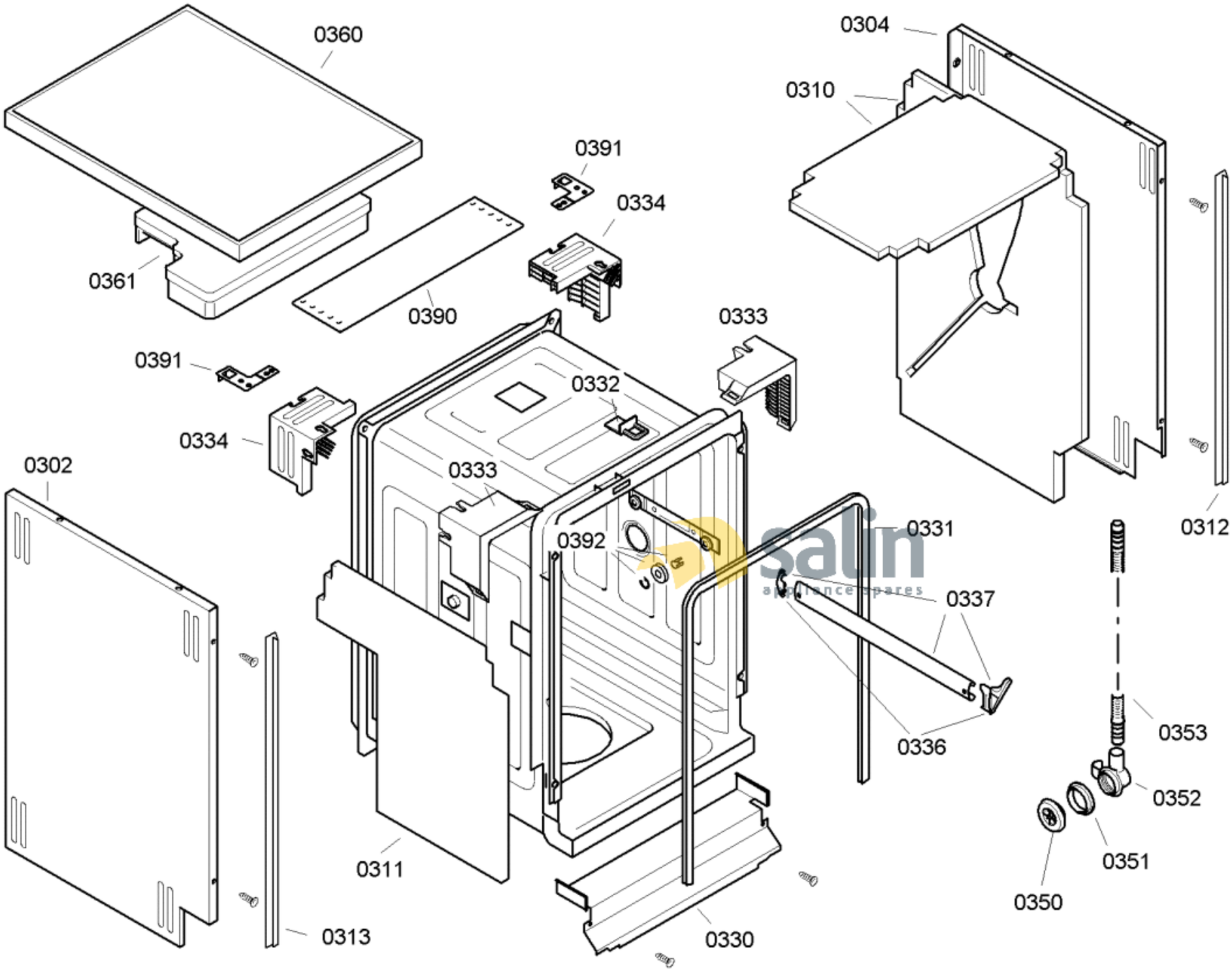

58300000138188 aet 000 a 3/6

FAMILY : SRS43E42EU

MODEL NO: SRS43E42EU/13

Check Position No/Part No or Replacement No

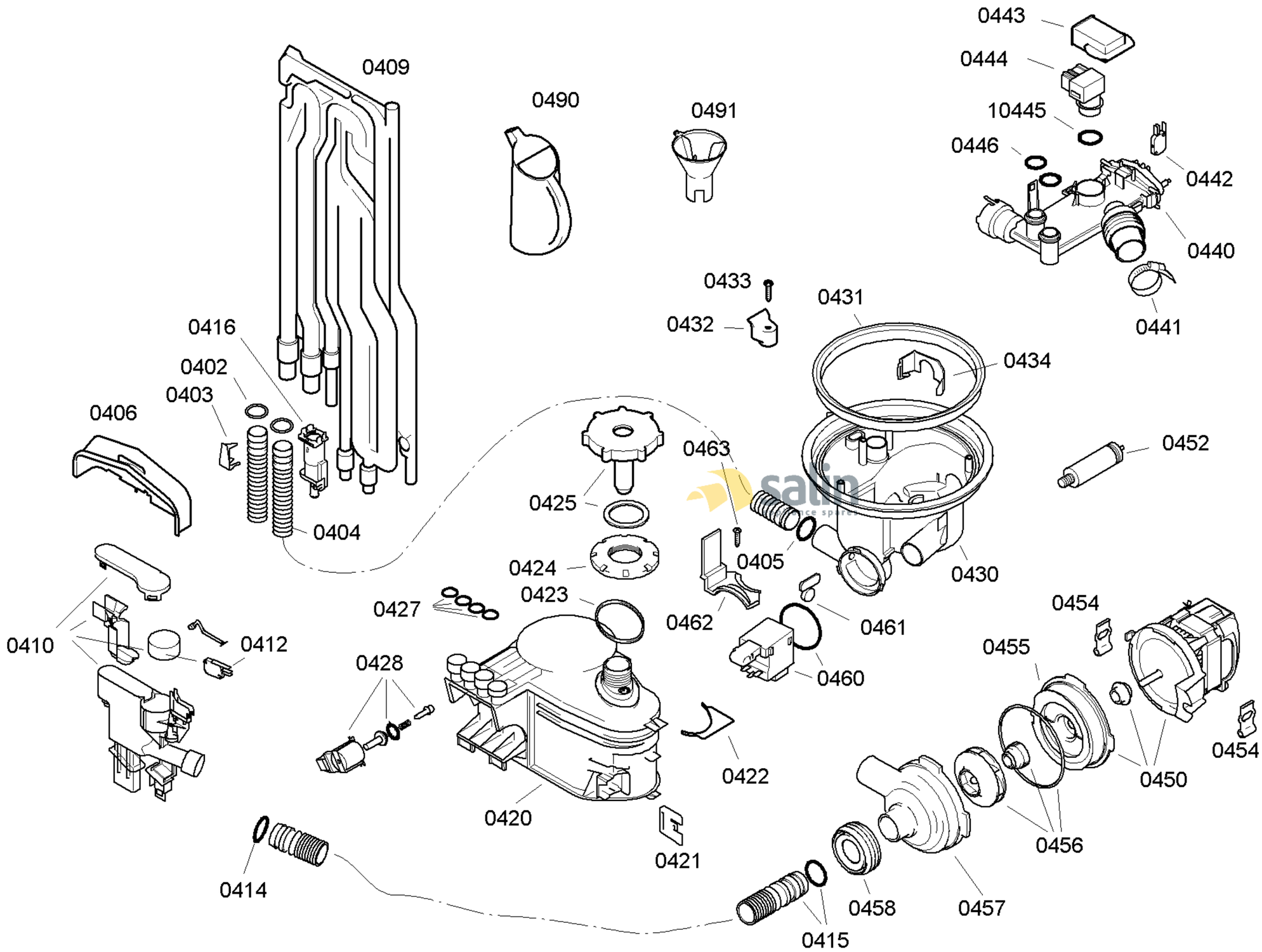

58300000138188 aet 000 a 4/6

FAMILY : SRS43E42EU
MODEL NO: SRS43E42EU/13
Check Position No/Part No or Replacement No

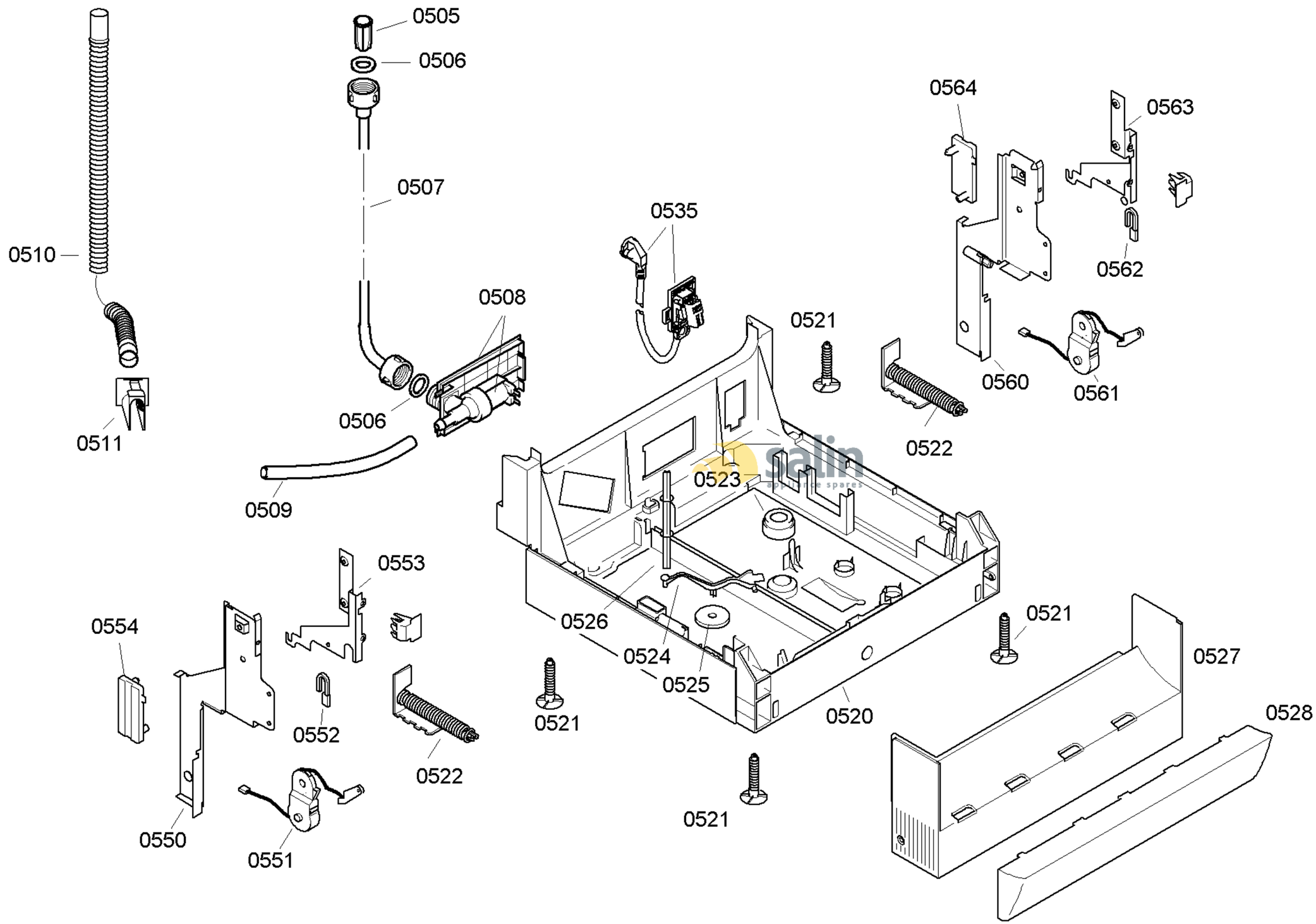

58300000138188 aet 000 a 5/6

FAMILY : SRS43E42EU
MODEL NO: SRS43E42EU/13
Check Position No/Part No or Replacement No

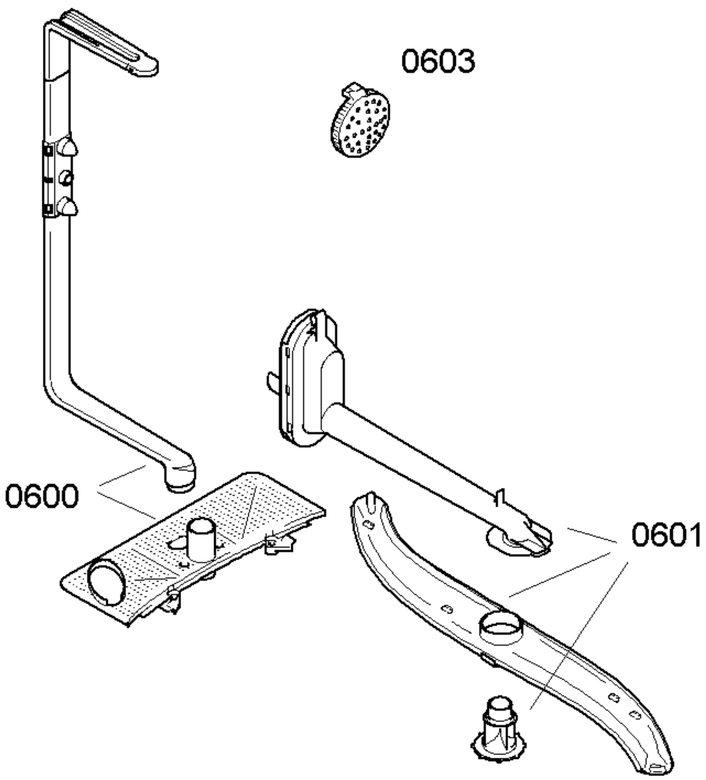

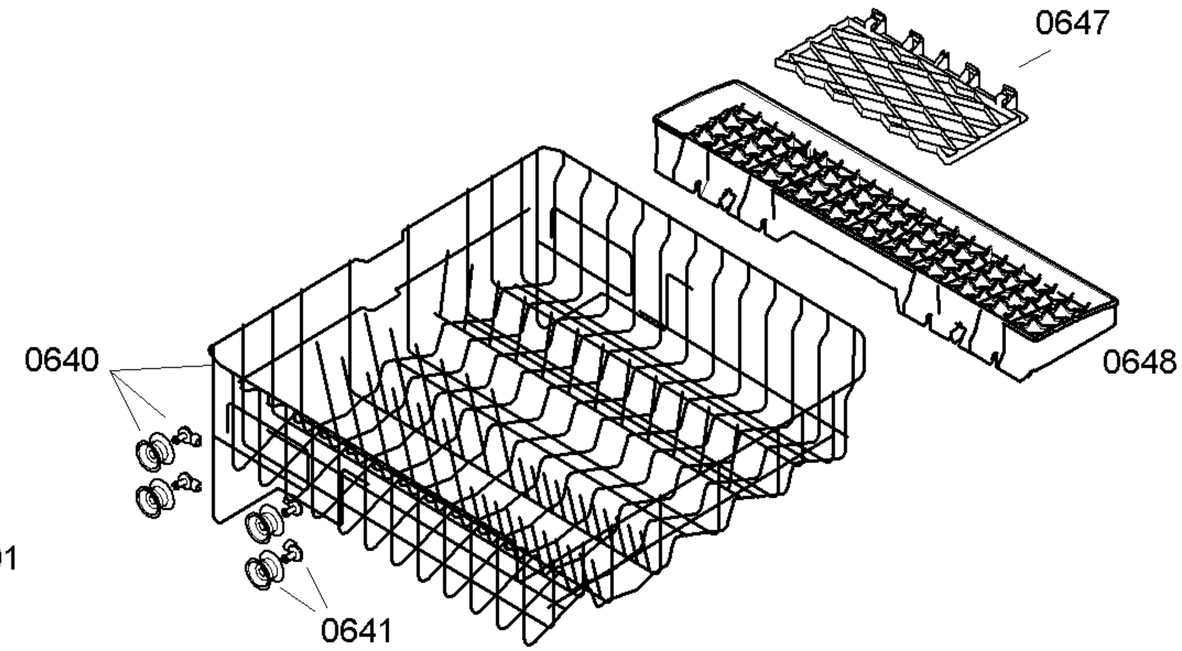

salin
appliance spares

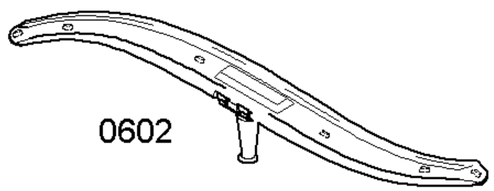

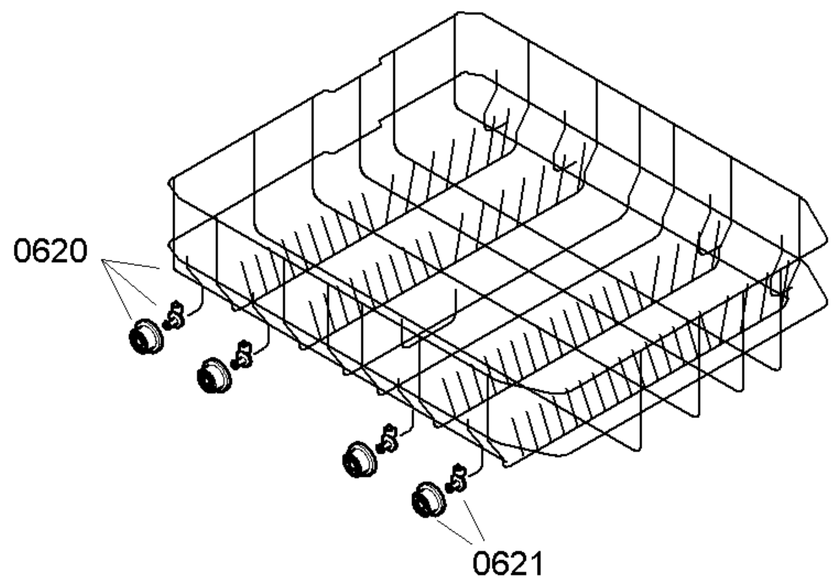

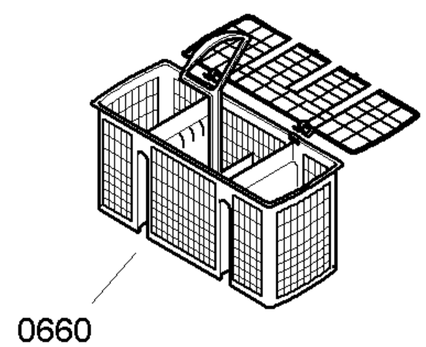

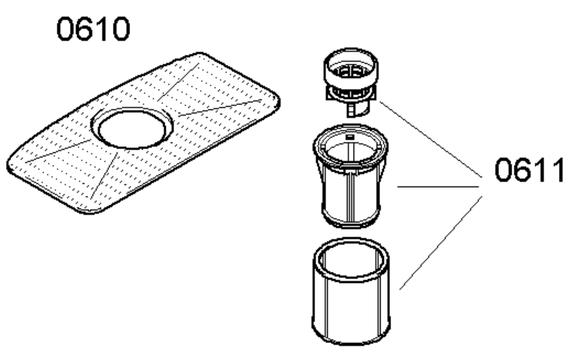

58300000138188 aet 000 a 6/6

FAMILY : SRS43E42EU
MODEL NO: SRS43E42EU/13
Check Position No/Part No or Replacement No