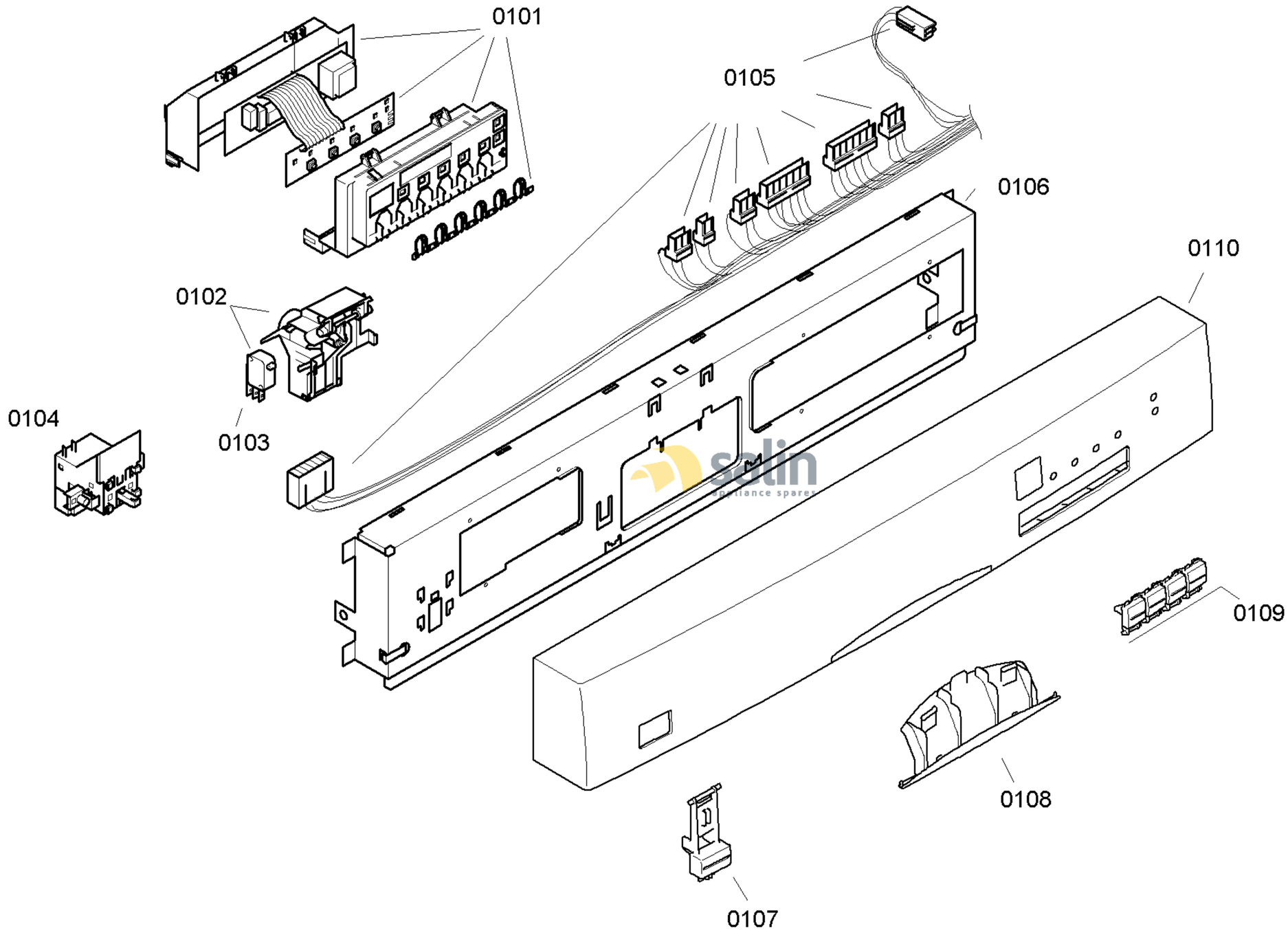

58300000119271 aet 000 b 1/6

FAMILY : SGS46M12EE
MODEL NO: SGS46M12EE/75
Check Position No/Part No or Replacement No

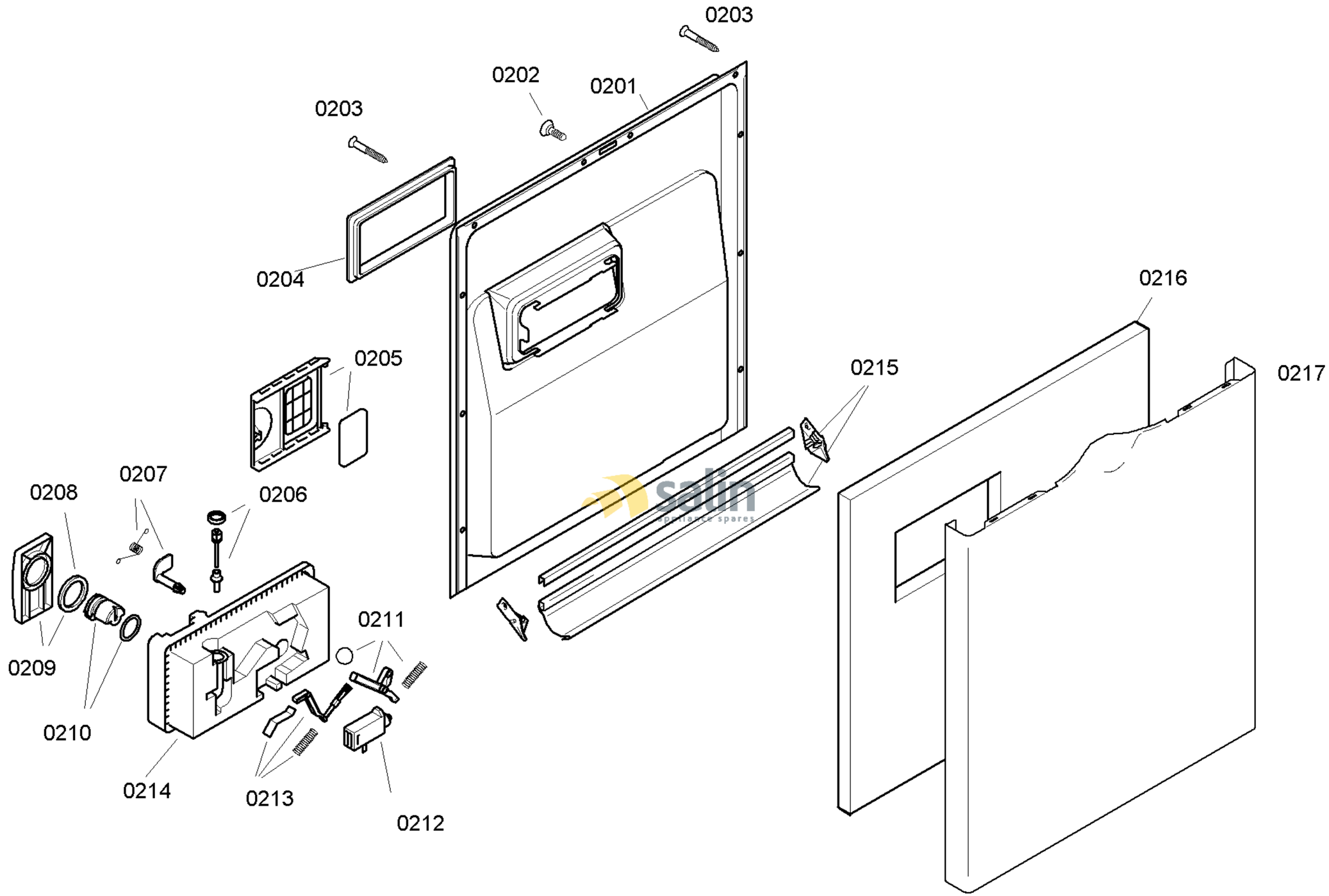

58300000119271 aet 000 b 2/6

FAMILY : SGS46M12EE
MODEL NO: SGS46M12EE/75
Check Position No/Part No or Replacement No

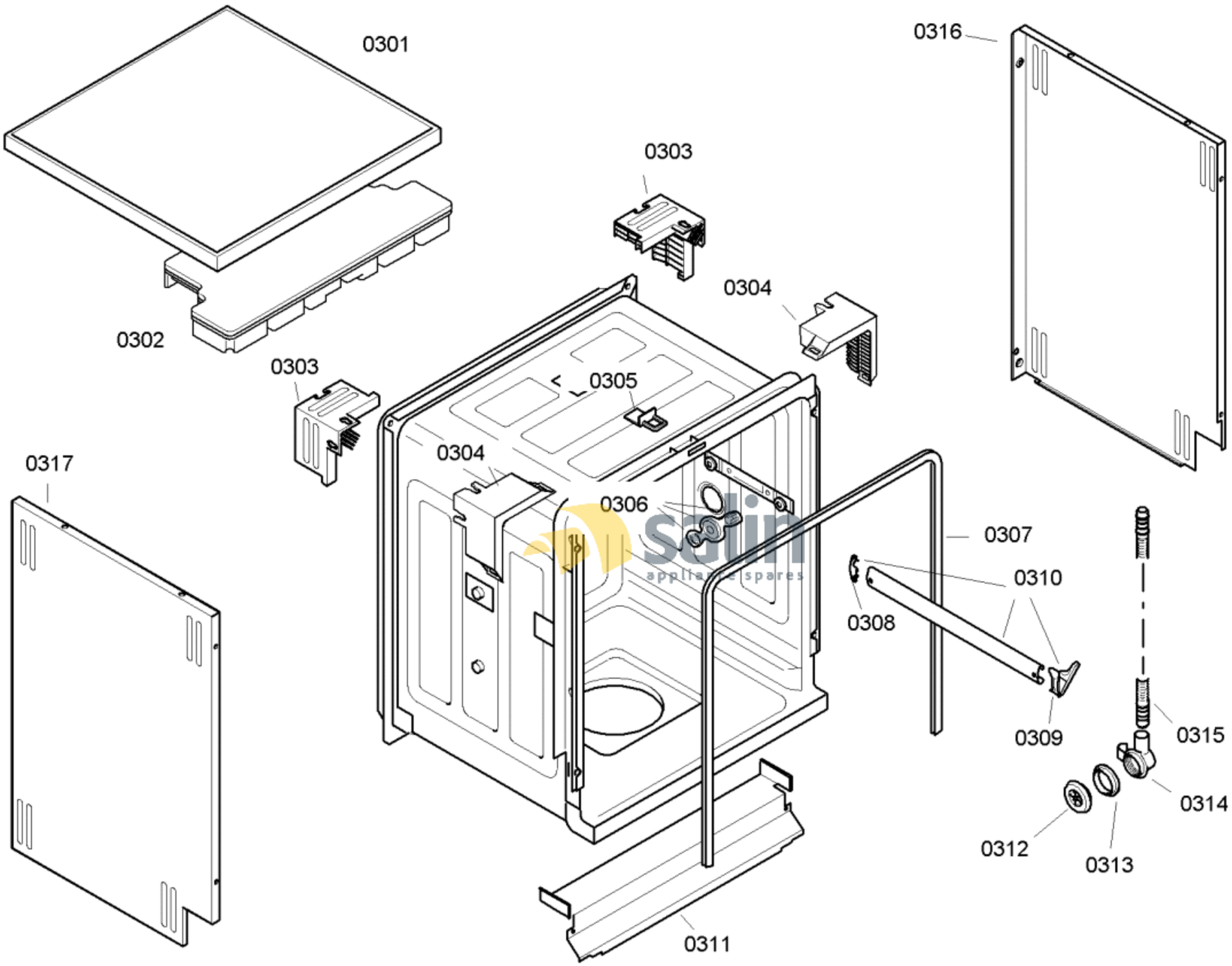

58300000119271 aet 000 b 3/6

FAMILY : SGS46M12EE

MODEL NO: SGS46M12EE/75

Check Position No/Part No or Replacement No

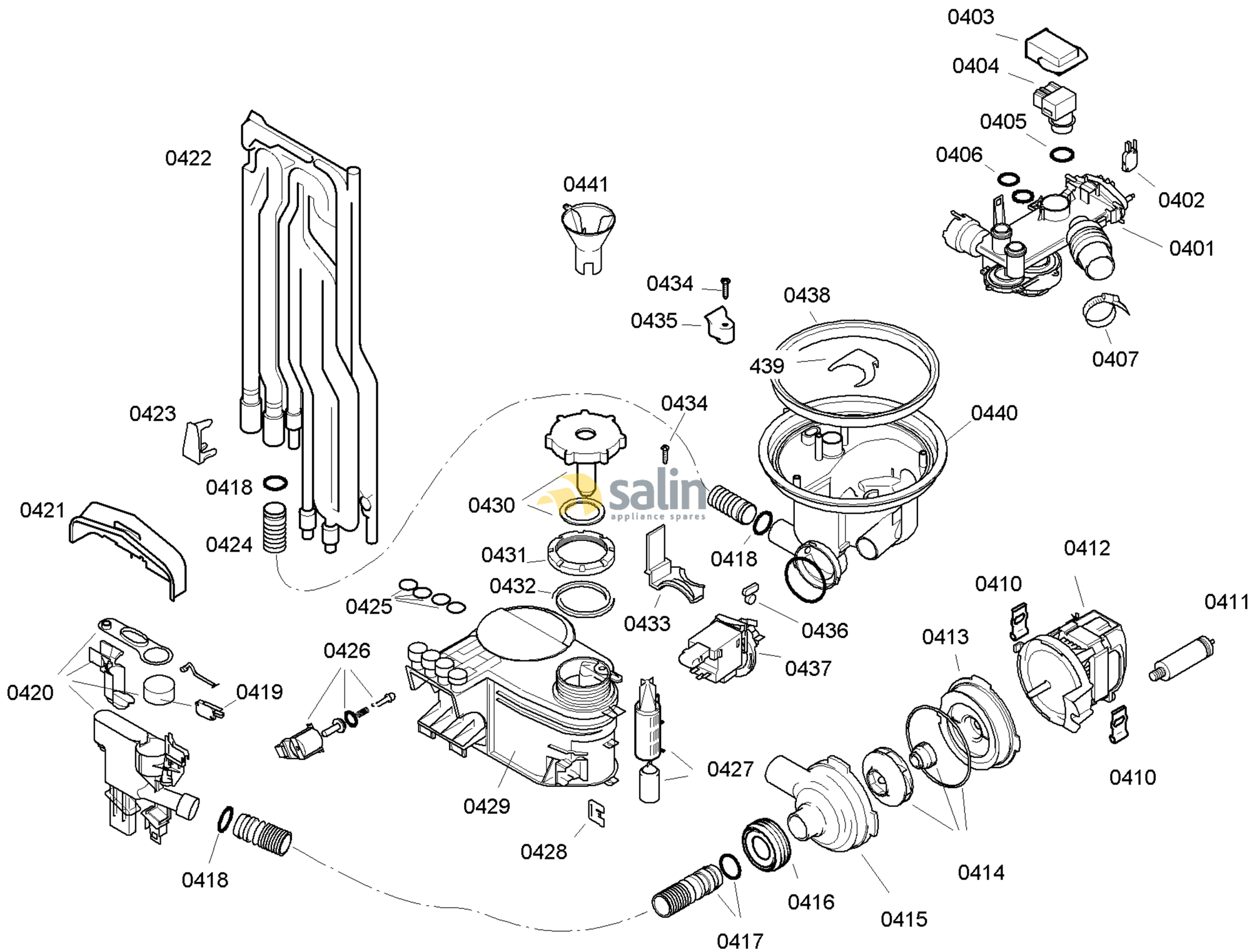

58300000119271 aet 000 b 4/6

FAMILY : SGS46M12EE
MODEL NO: SGS46M12EE/75
Check Position No/Part No or Replacement No

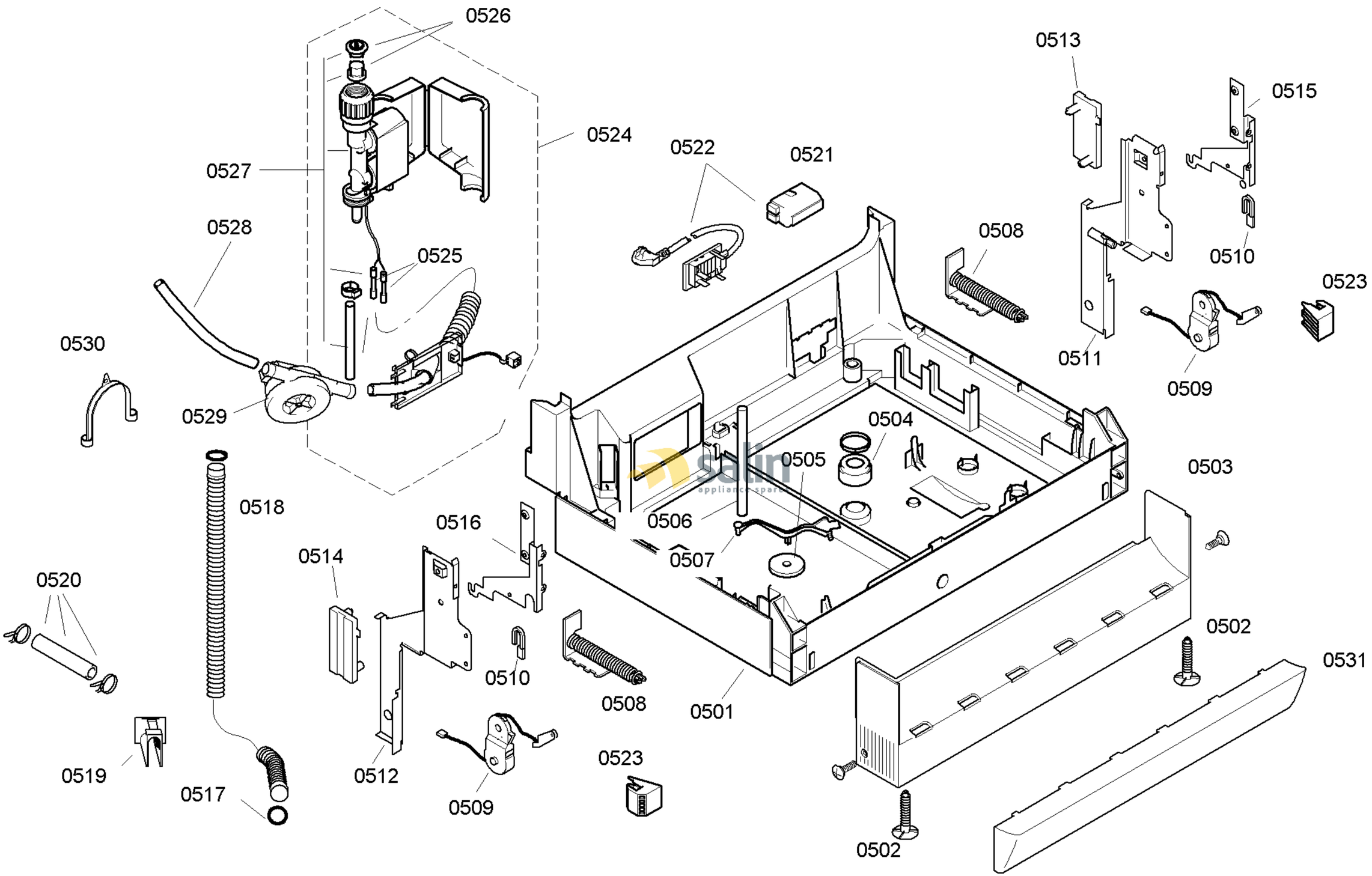

58300000119271 aet 000 b 5/6

FAMILY : SGS46M12EE
MODEL NO: SGS46M12EE/75
Check Position No/Part No or Replacement No

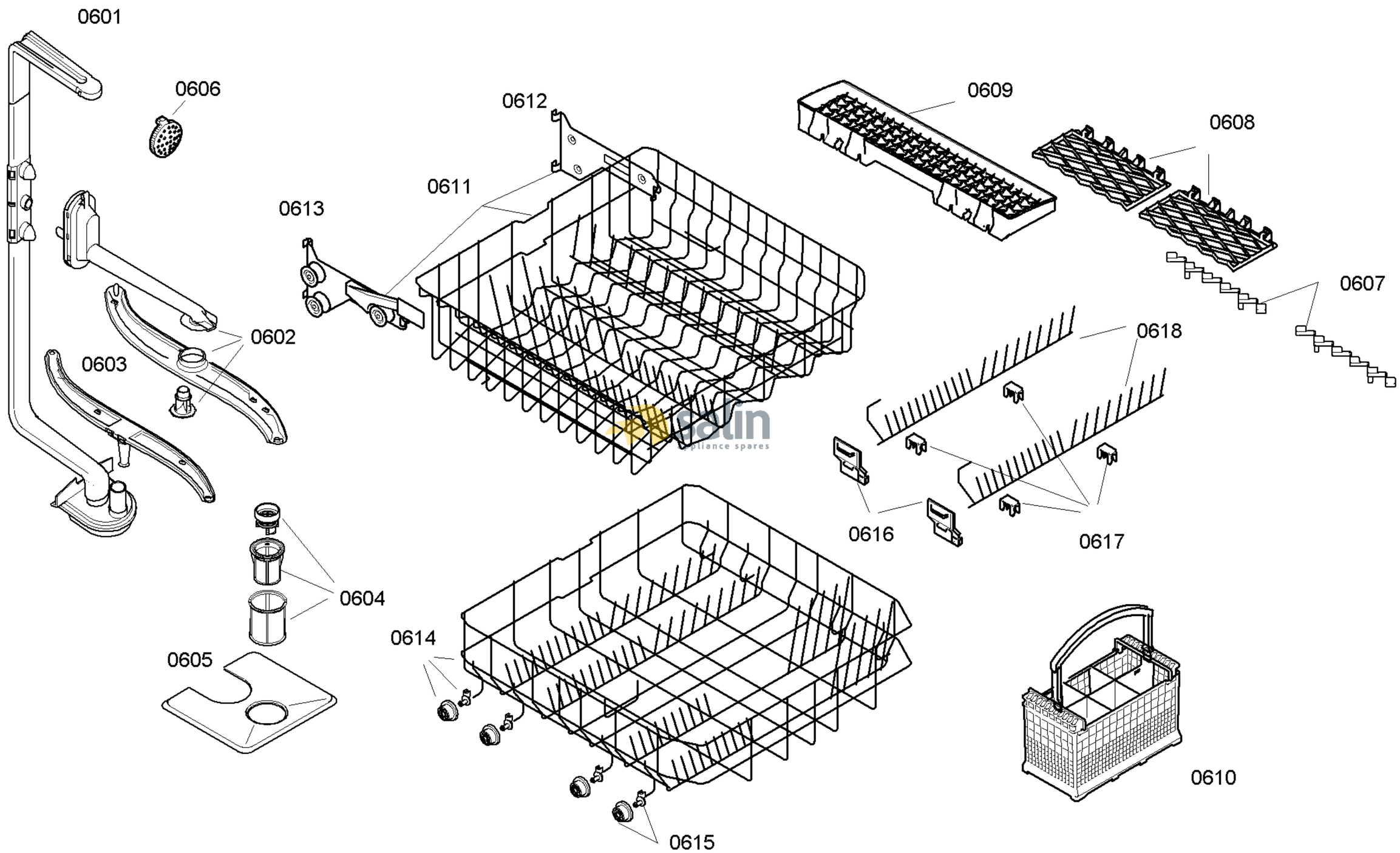

58300000119271 aet 000 b 6/6

FAMILY : SGS46M12EE
MODEL NO: SGS46M12EE/75
Check Position No/Part No or Replacement No