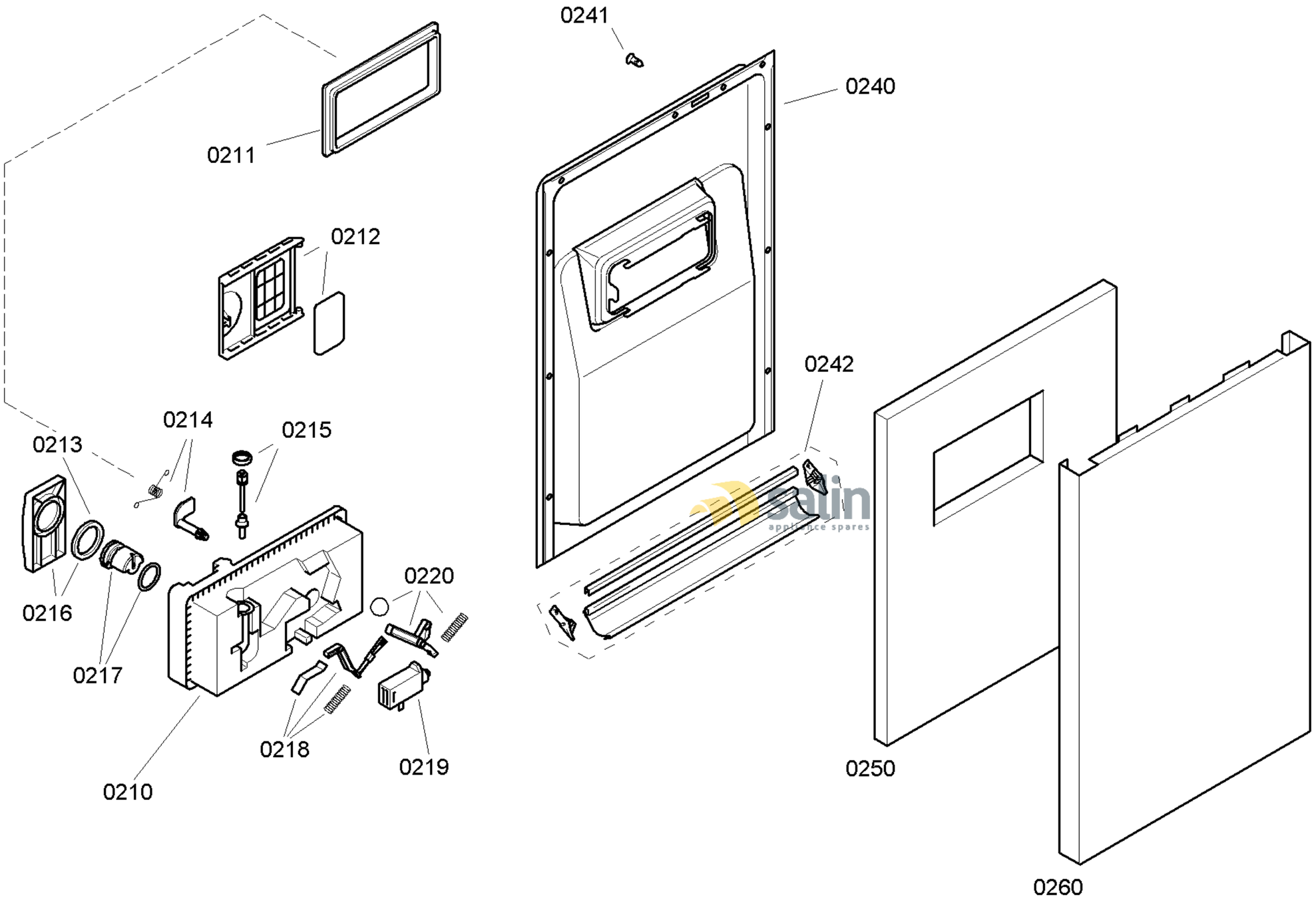

58300000120819 aet 000 a 2/6

FAMILY : SRU53E05AU
MODEL NO: SRU53E05AU/01
Check Position No/Part No or Replacement No

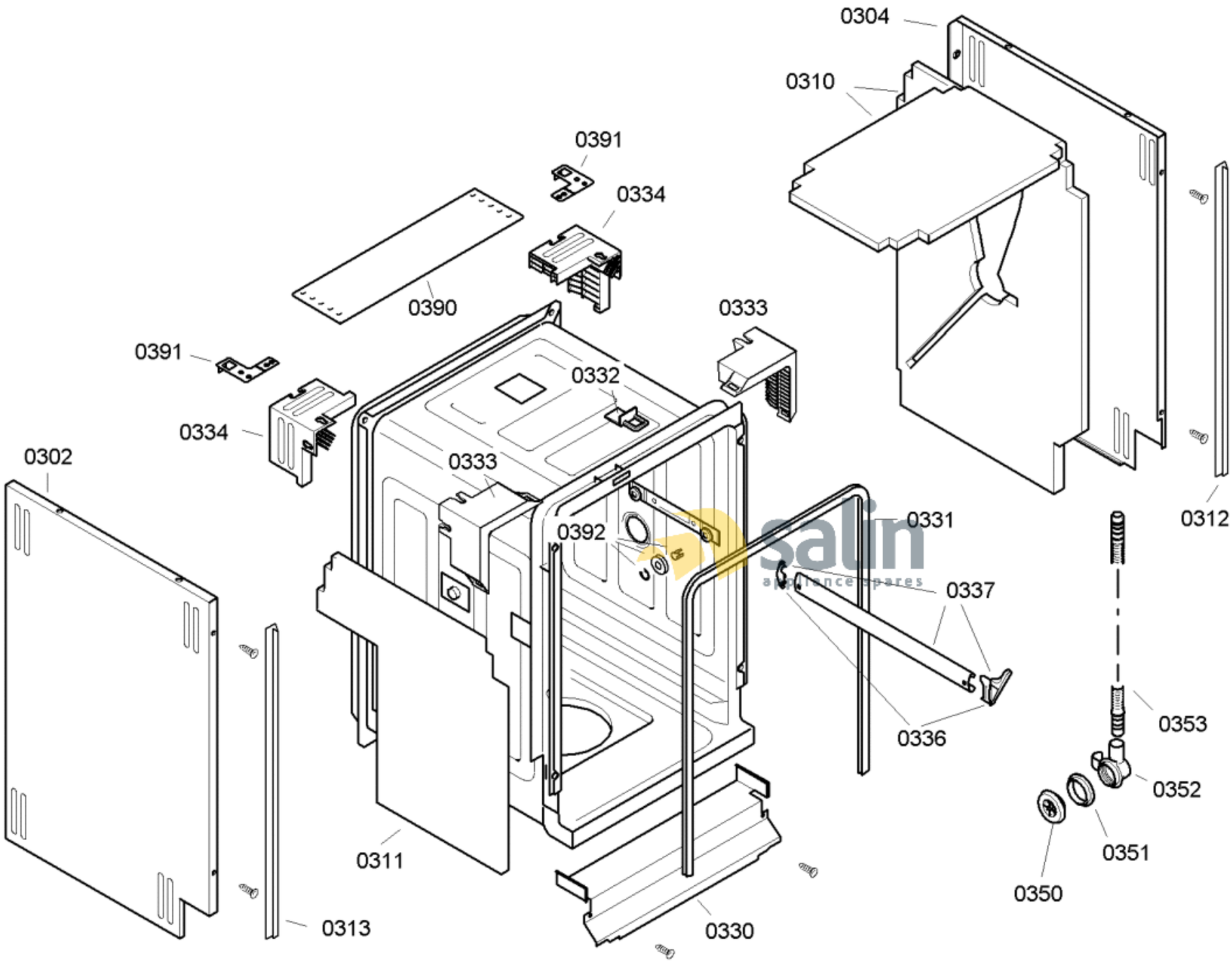

58300000120819 aet 000 a 3/6

FAMILY : SRU53E05AU

MODEL NO: SRU53E05AU/01

Check Position No/Part No or Replacement No

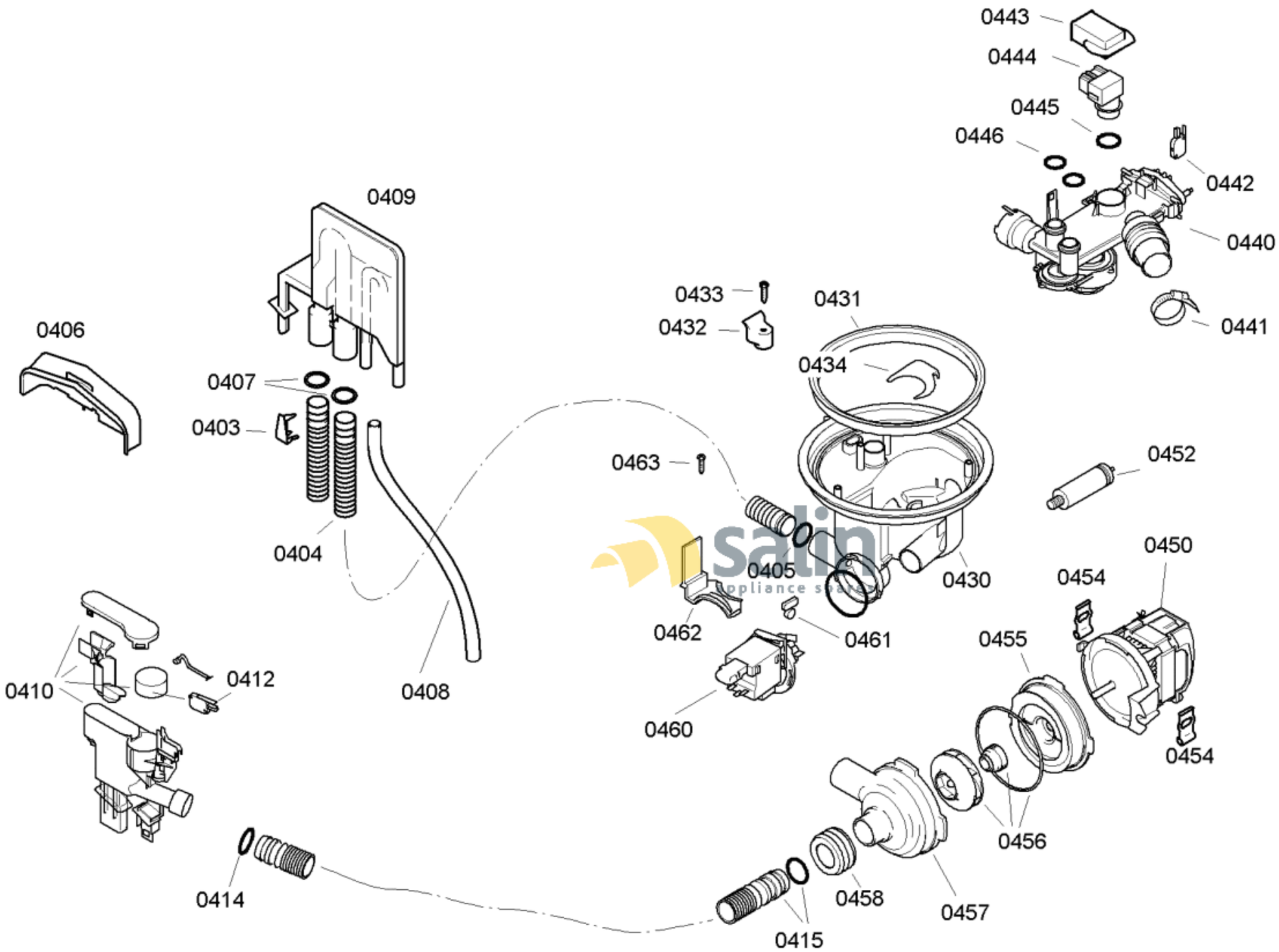

58300000120819 aet 000 a 4/6

FAMILY : SRU53E05AU

MODEL NO: SRU53E05AU/01

Check Position No/Part No or Replacement No

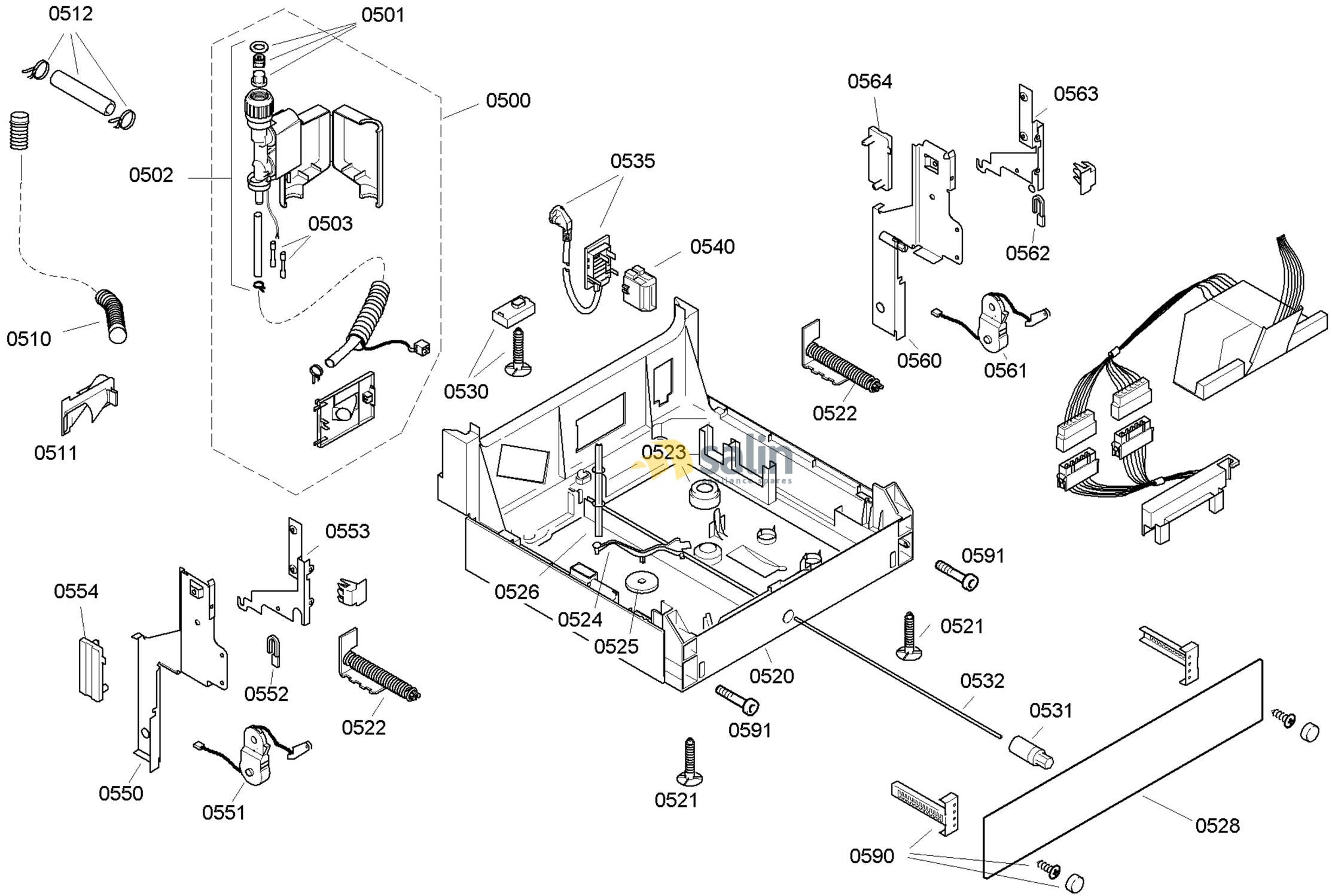

58300000120819 aet 000 a 5/6

FAMILY : SRU53E05AU
MODEL NO: SRU53E05AU/01
Check Position No/Part No or Replacement No

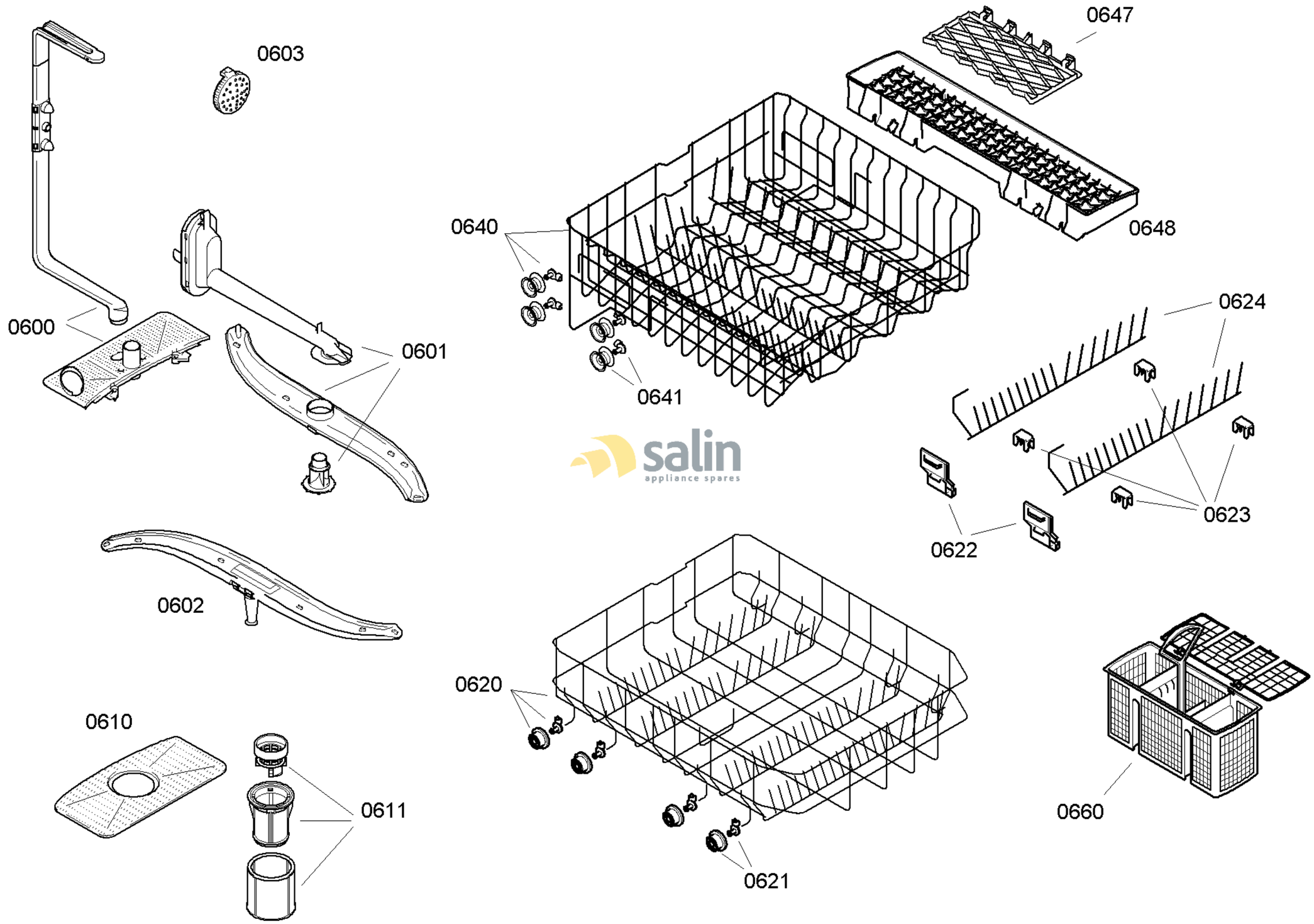

58300000120819 aet 000 a 6/6

FAMILY : SRU53E05AU
MODEL NO: SRU53E05AU/01
Check Position No/Part No or Replacement No