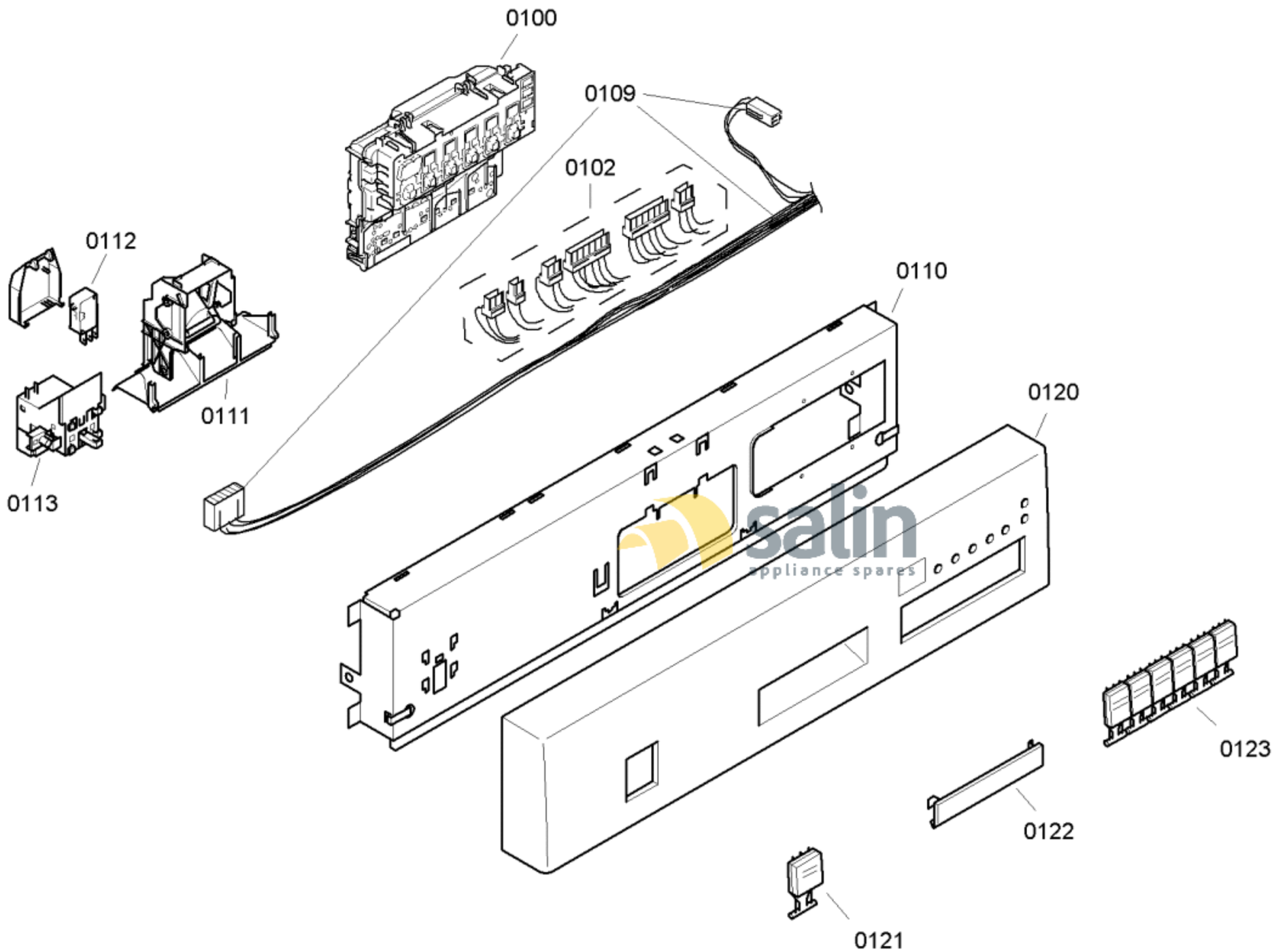

58300000110134 aet 000 c 1/6

FAMILY : SRS55L12GB

MODEL NO: SRS55L12GB/29

Check Position No/Part No or Replacement No

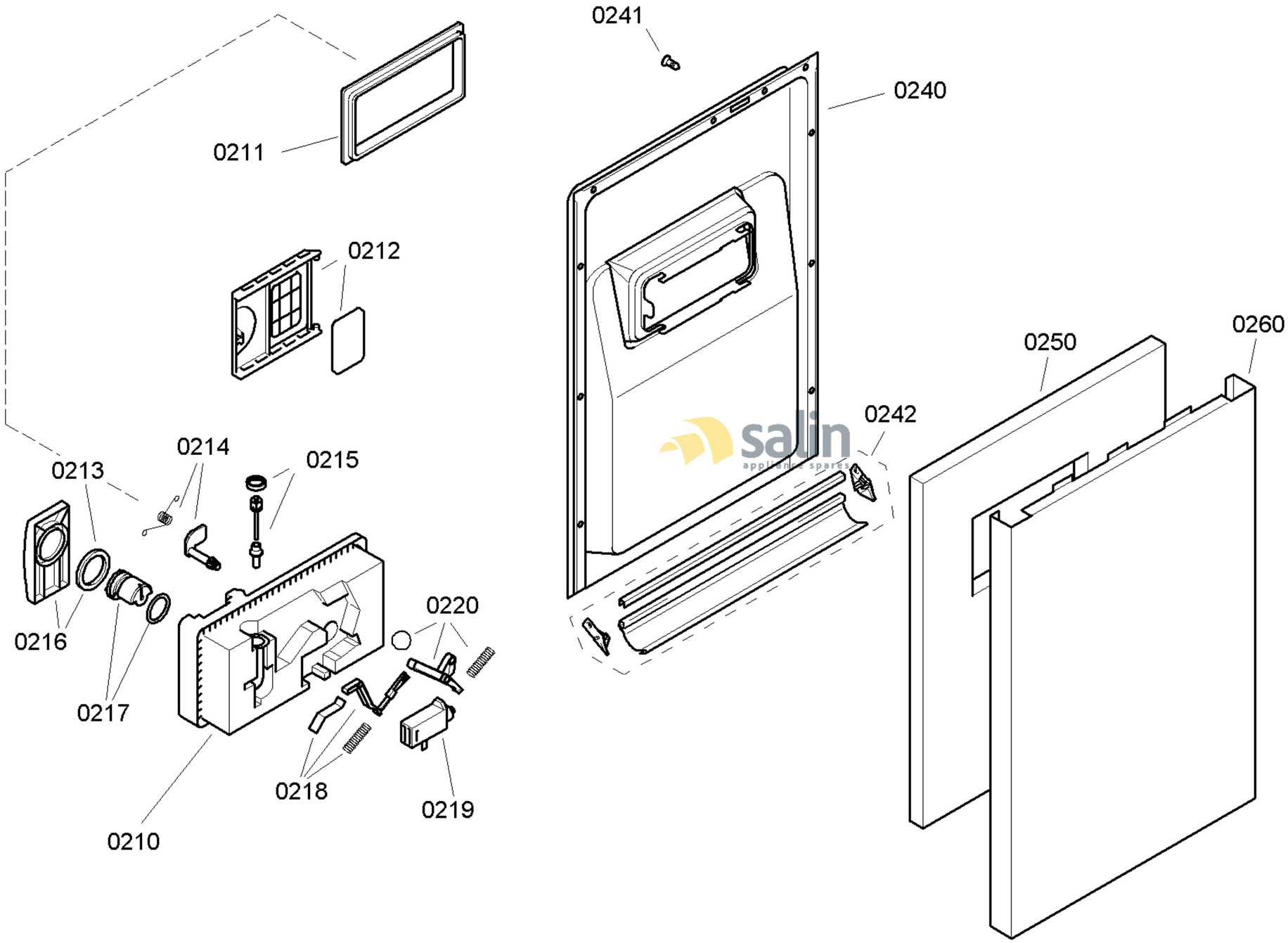

58300000110134 aet 000 c 2/6

FAMILY : SRS55L12GB
MODEL NO: SRS55L12GB/29
Check Position No/Part No or Replacement No

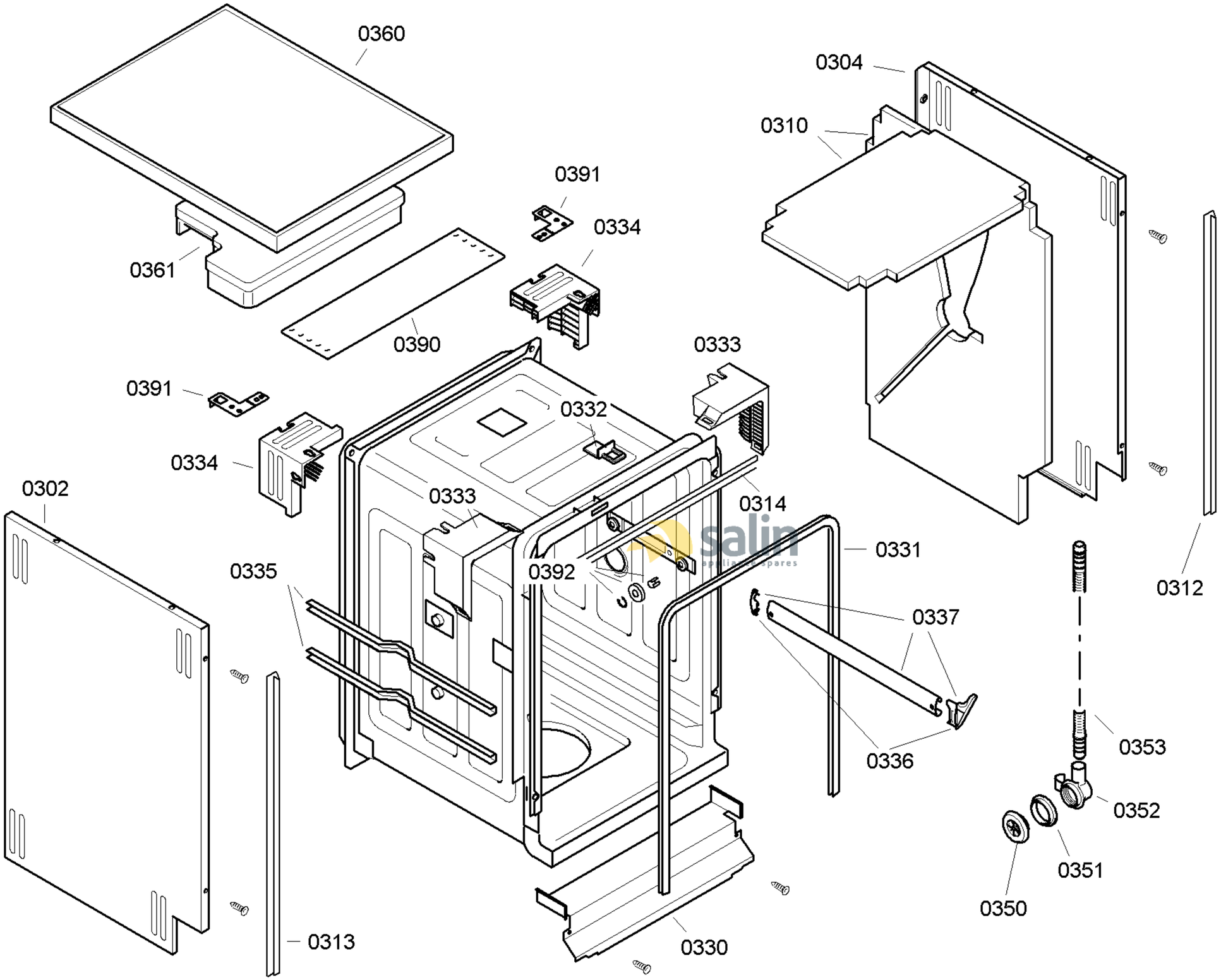

58300000110134 aet 000 c 3/6

FAMILY : SRS55L12GB
MODEL NO: SRS55L12GB/29
Check Position No/Part No or Replacement No

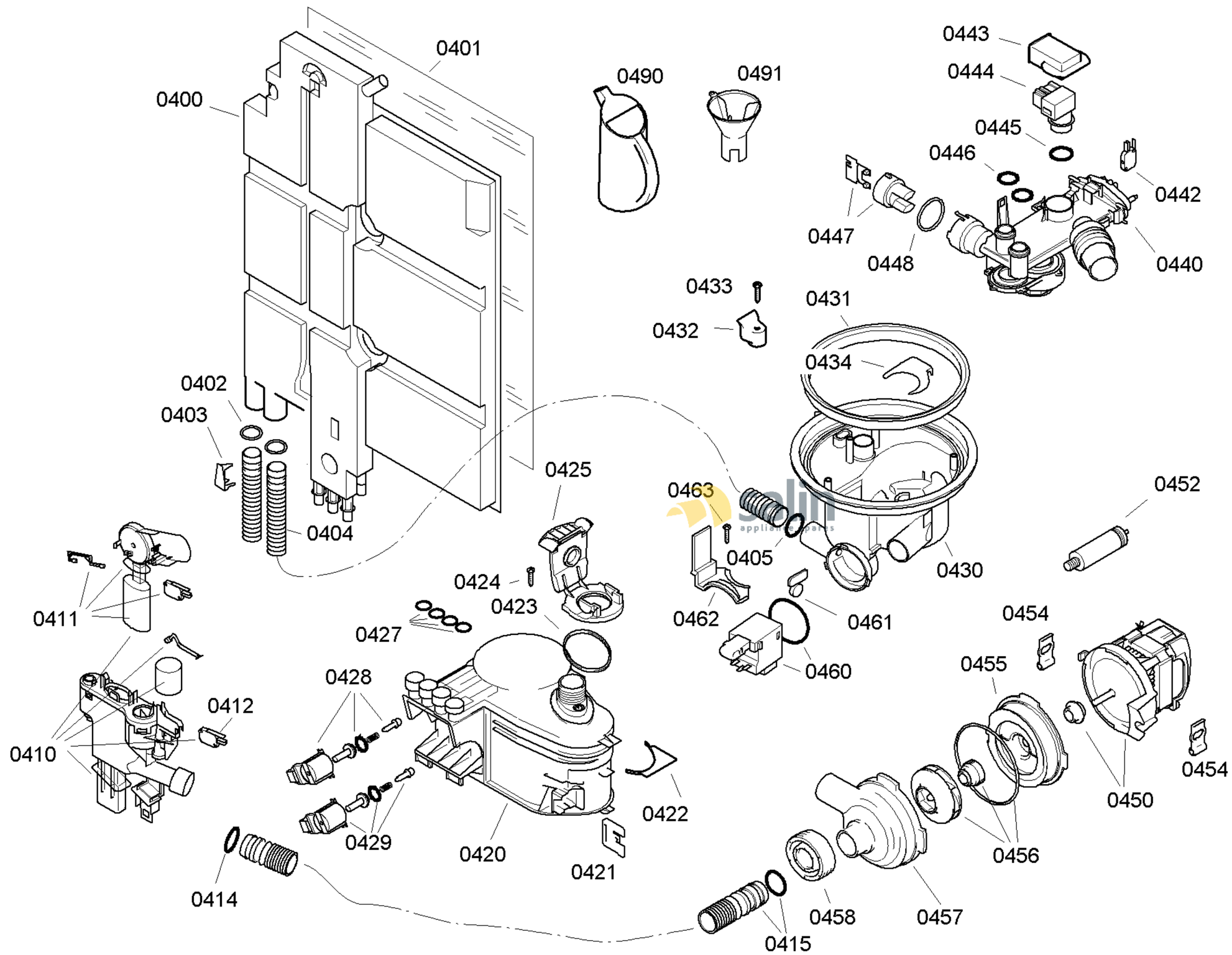

58300000110134 aet 000 c 4/6

FAMILY : SRS55L12GB
MODEL NO: SRS55L12GB/29
Check Position No/Part No or Replacement No

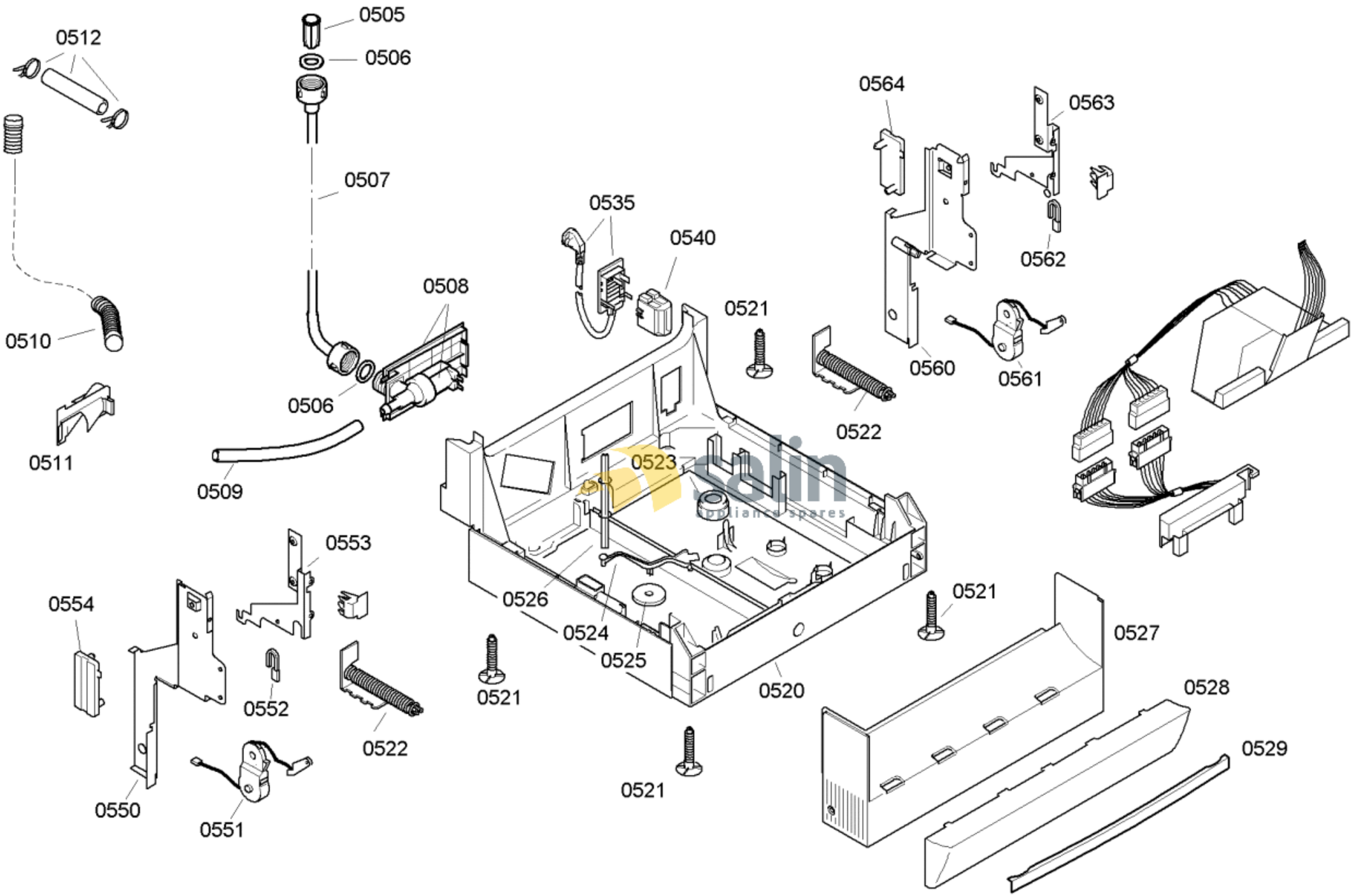

58300000110134 aet 000 c 5/6

FAMILY : SRS55L12GB

MODEL NO: SRS55L12GB/29

Check Position No/Part No or Replacement No

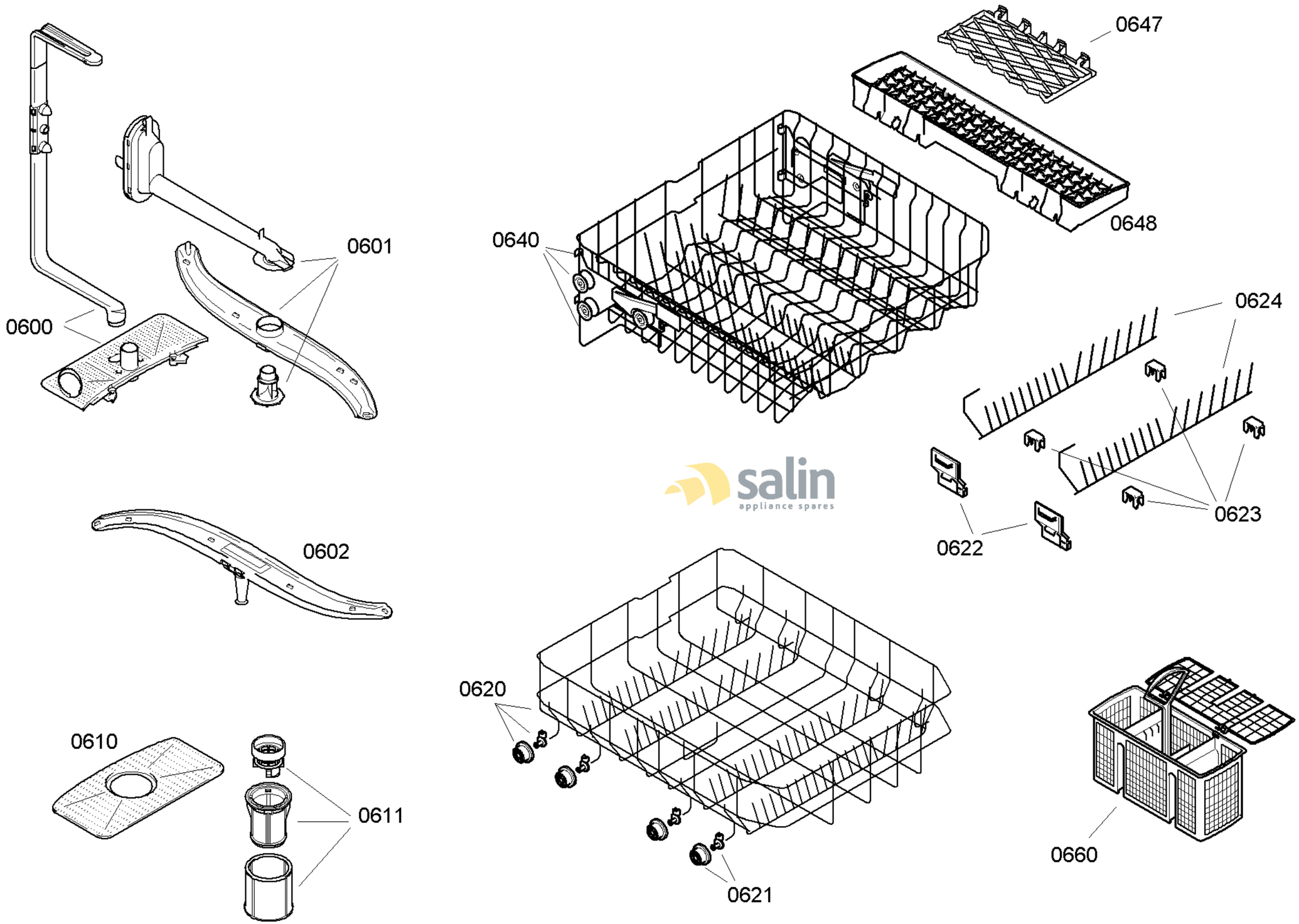

salin
appliance spares

58300000110134 aet 000 c 6/6

FAMILY : SRS55L12GB
MODEL NO: SRS55L12GB/29
Check Position No/Part No or Replacement No