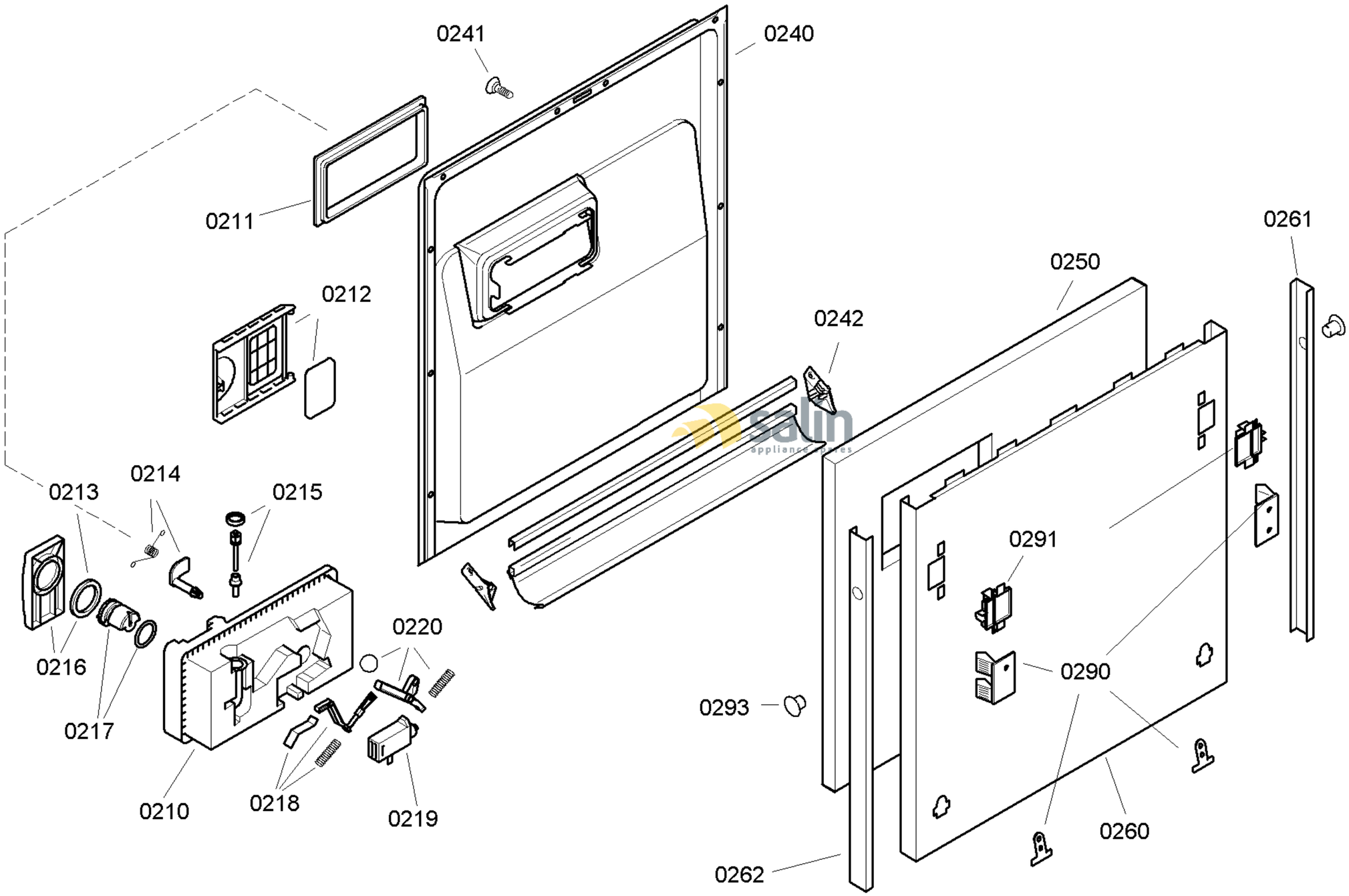

58300000104098 aet 000 b 2/6

FAMILY : SGI57M26EU
MODEL NO: SGI57M26EU/17
Check Position No/Part No or Replacement No

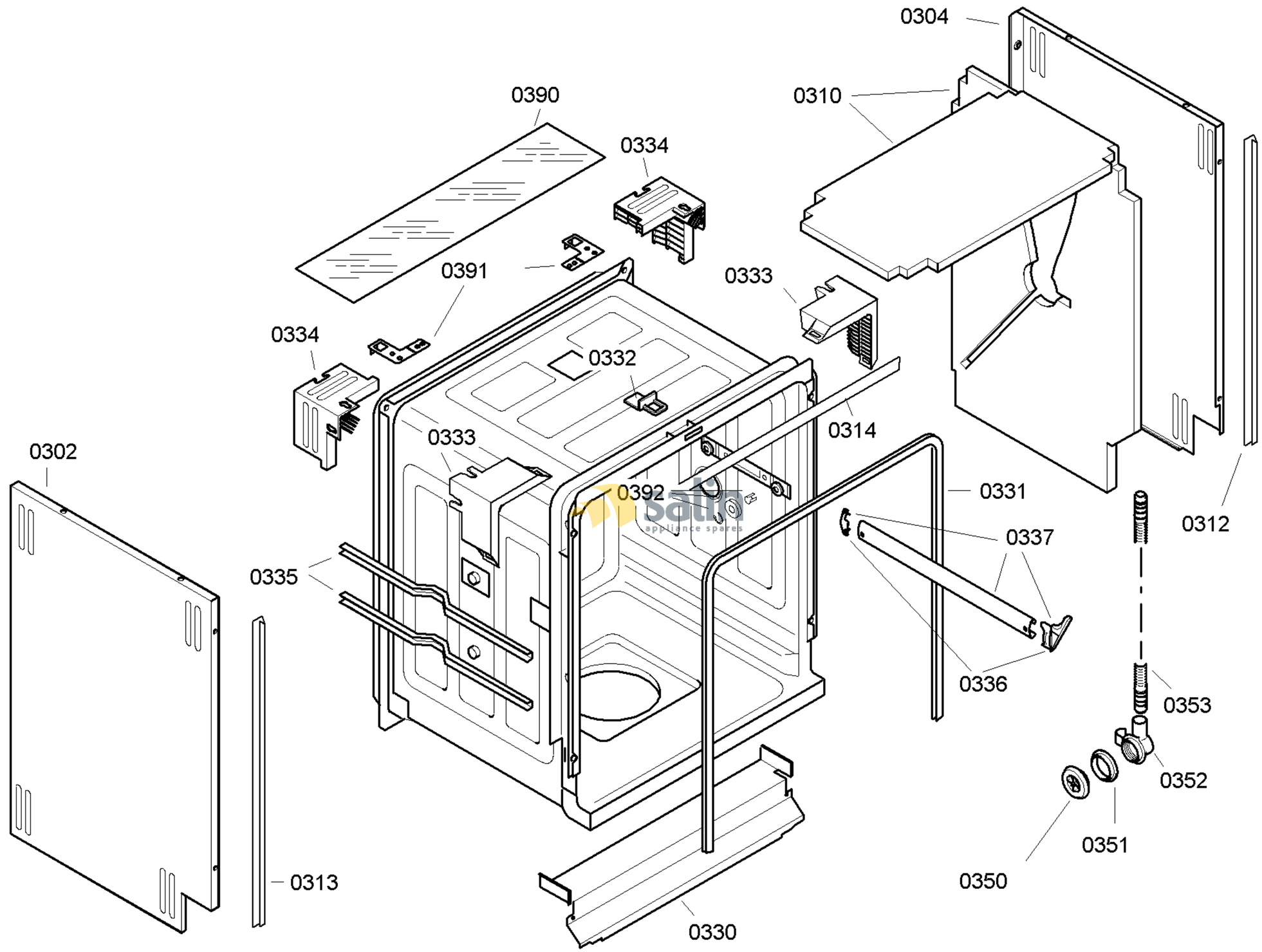

58300000104098 aet 000 b 3/6

FAMILY : SGI57M26EU
MODEL NO: SGI57M26EU/17
Check Position No/Part No or Replacement No

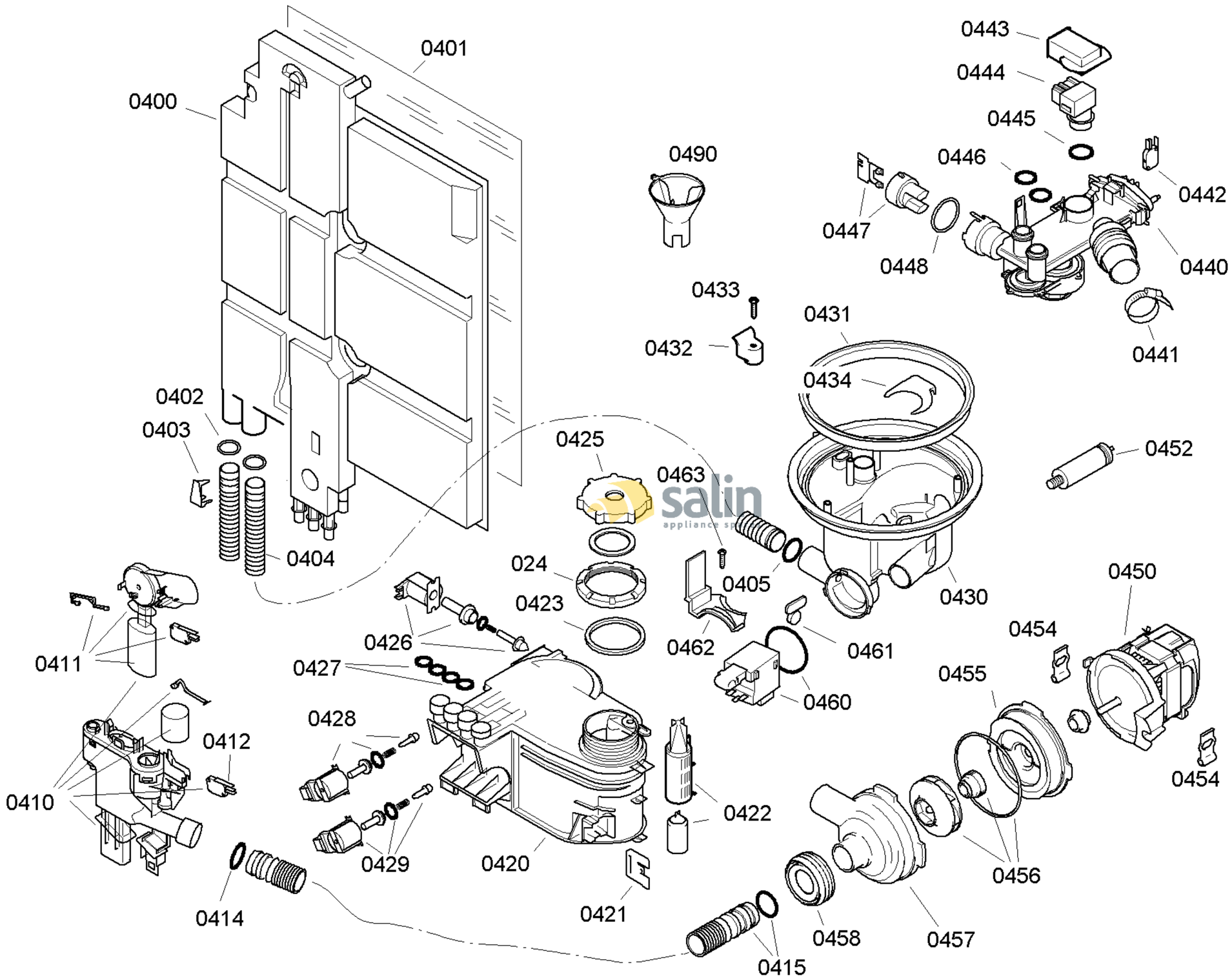

58300000104098 aet 000 b 4/6

FAMILY : SGI57M26EU
MODEL NO: SGI57M26EU/17
Check Position No/Part No or Replacement No

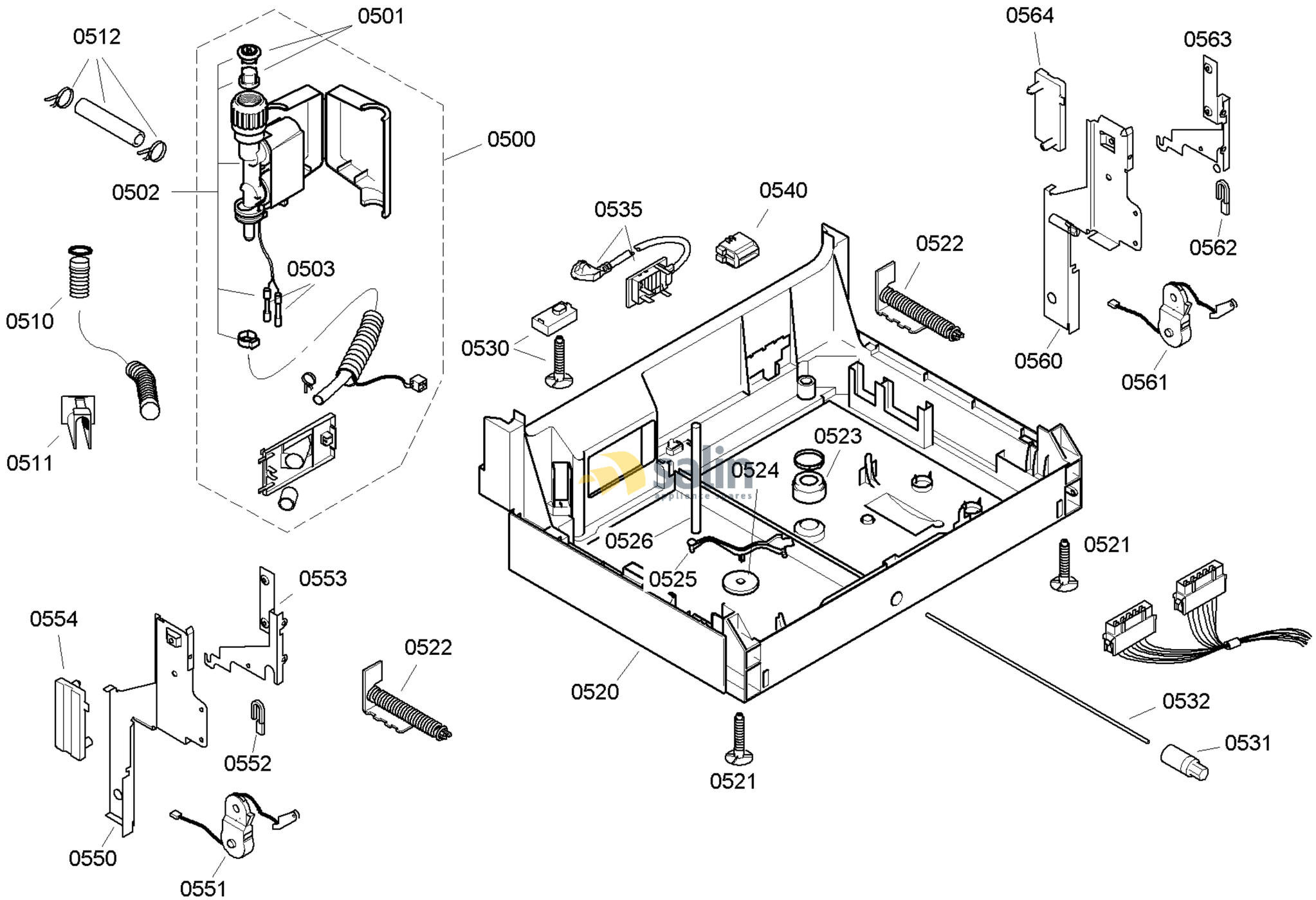

58300000104098 aet 000 b 5/6

FAMILY : SGI57M26EU
MODEL NO: SGI57M26EU/17
Check Position No/Part No or Replacement No

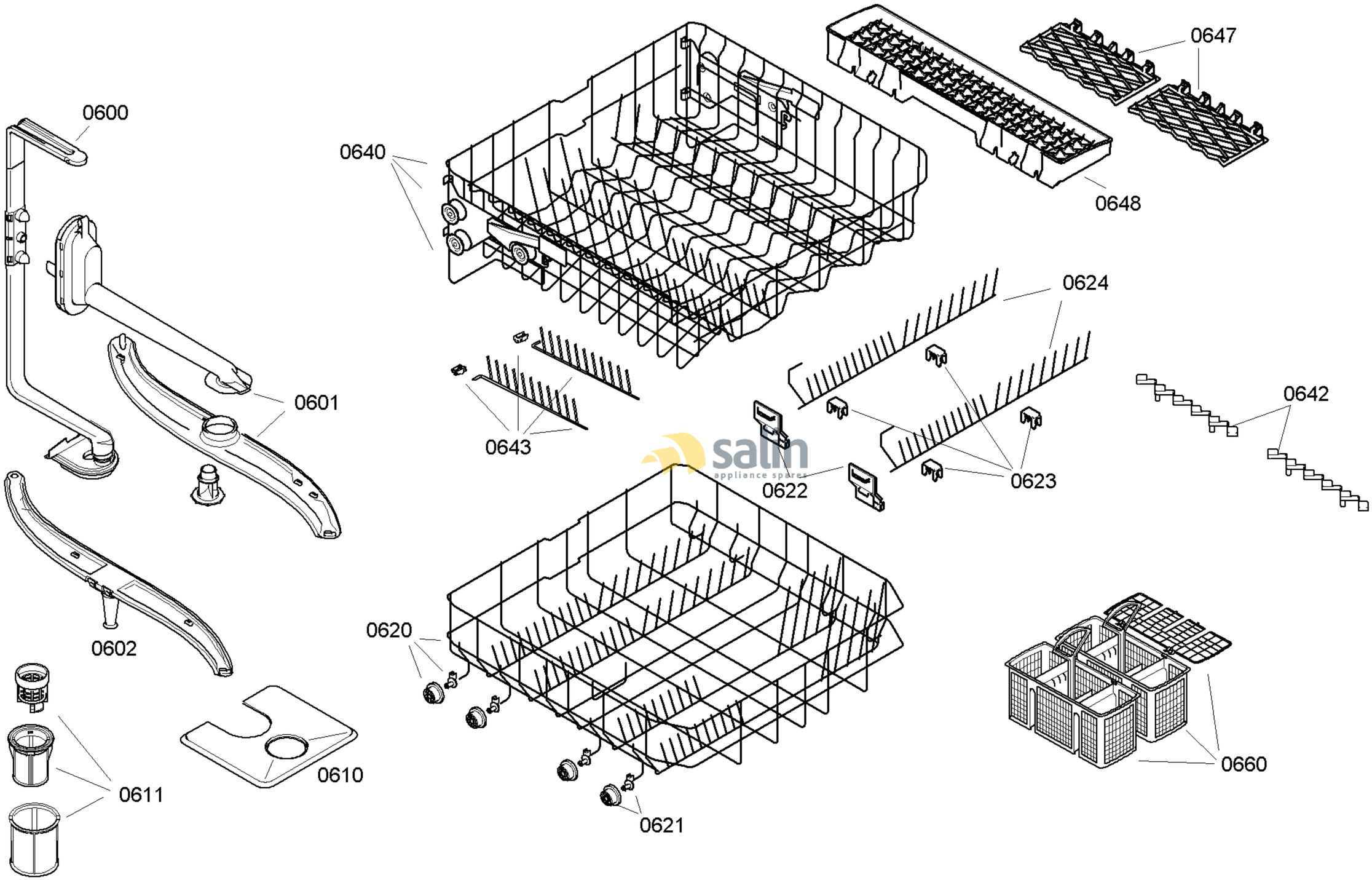

58300000104098 aet 000 b 6/6

FAMILY : SGI57M26EU
MODEL NO: SGI57M26EU/17
Check Position No/Part No or Replacement No