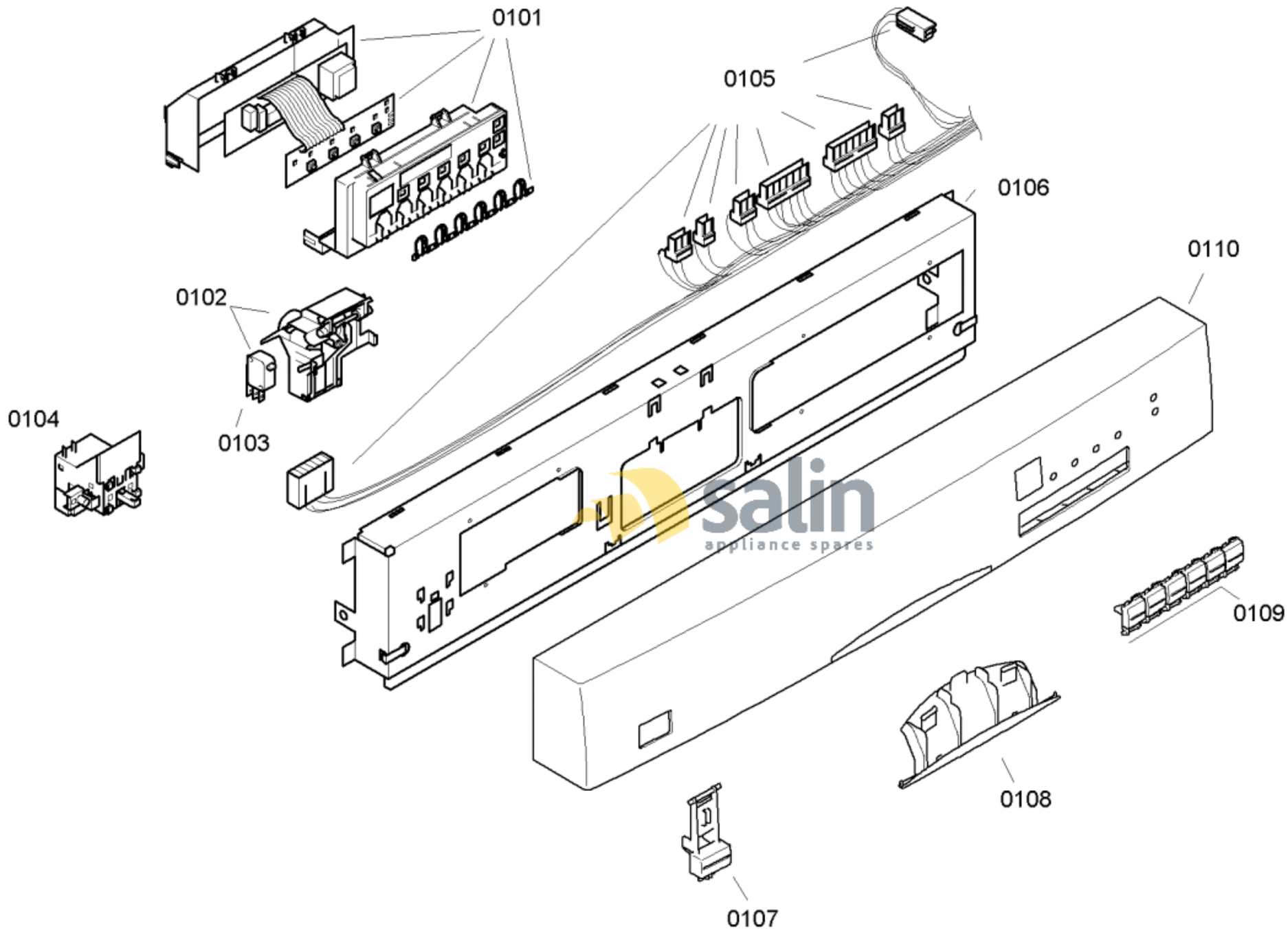

salin
appliance spares

58300000119305 aet 000 b 1/6

FAMILY : SGS45M32II

MODEL NO: SGS45M32II/75

Check Position No/Part No or Replacement No

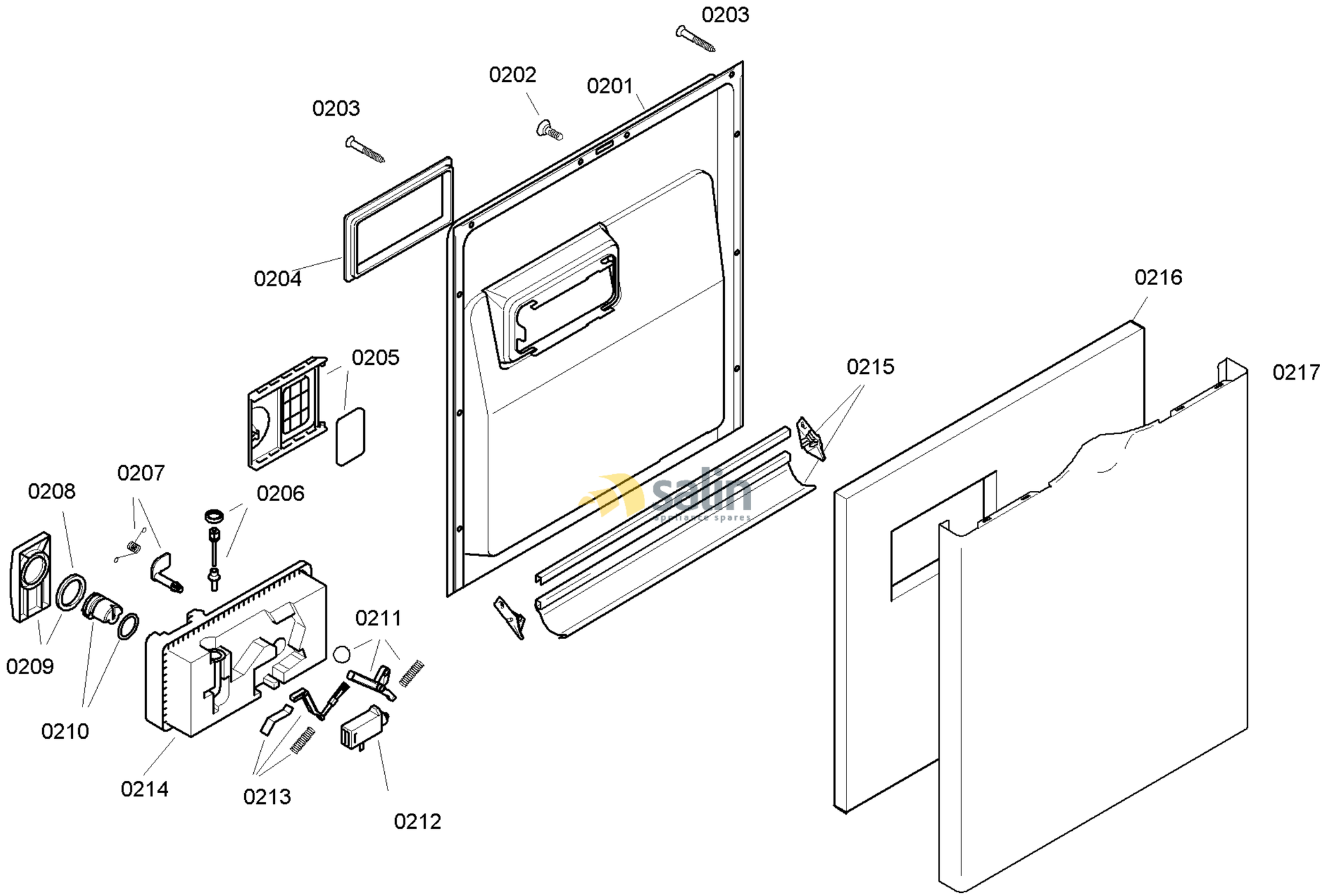

58300000119305 aet 000 b 2/6

FAMILY : SGS45M32II
MODEL NO: SGS45M32II/75
Check Position No/Part No or Replacement No

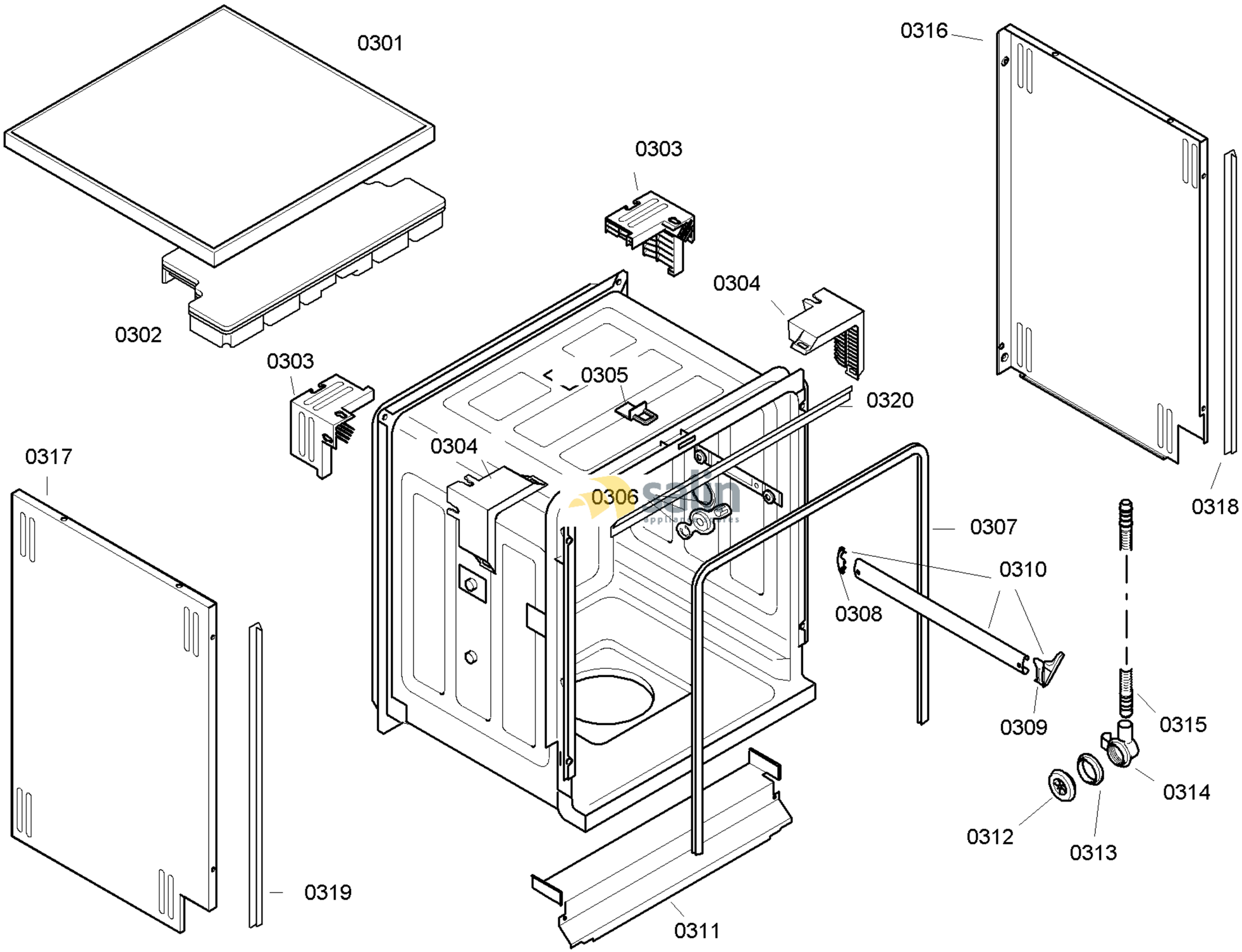

58300000119305 aet 000 b 3/6

FAMILY : SGS45M32II
MODEL NO: SGS45M32II/75
Check Position No/Part No or Replacement No

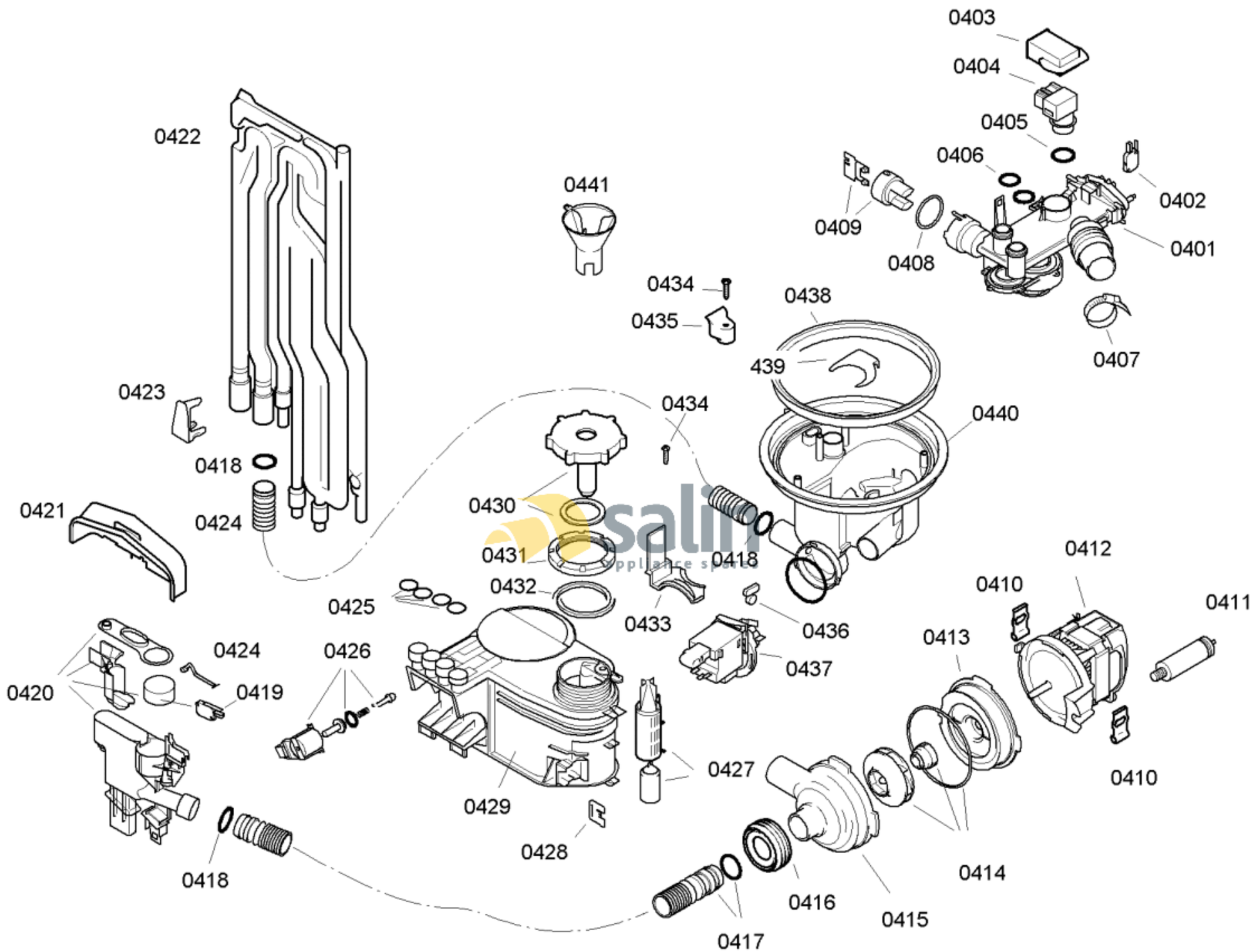

58300000119305 aet 000 b 4/6

FAMILY : SGS45M32II

MODEL NO: SGS45M32II/75

Check Position No/Part No or Replacement No

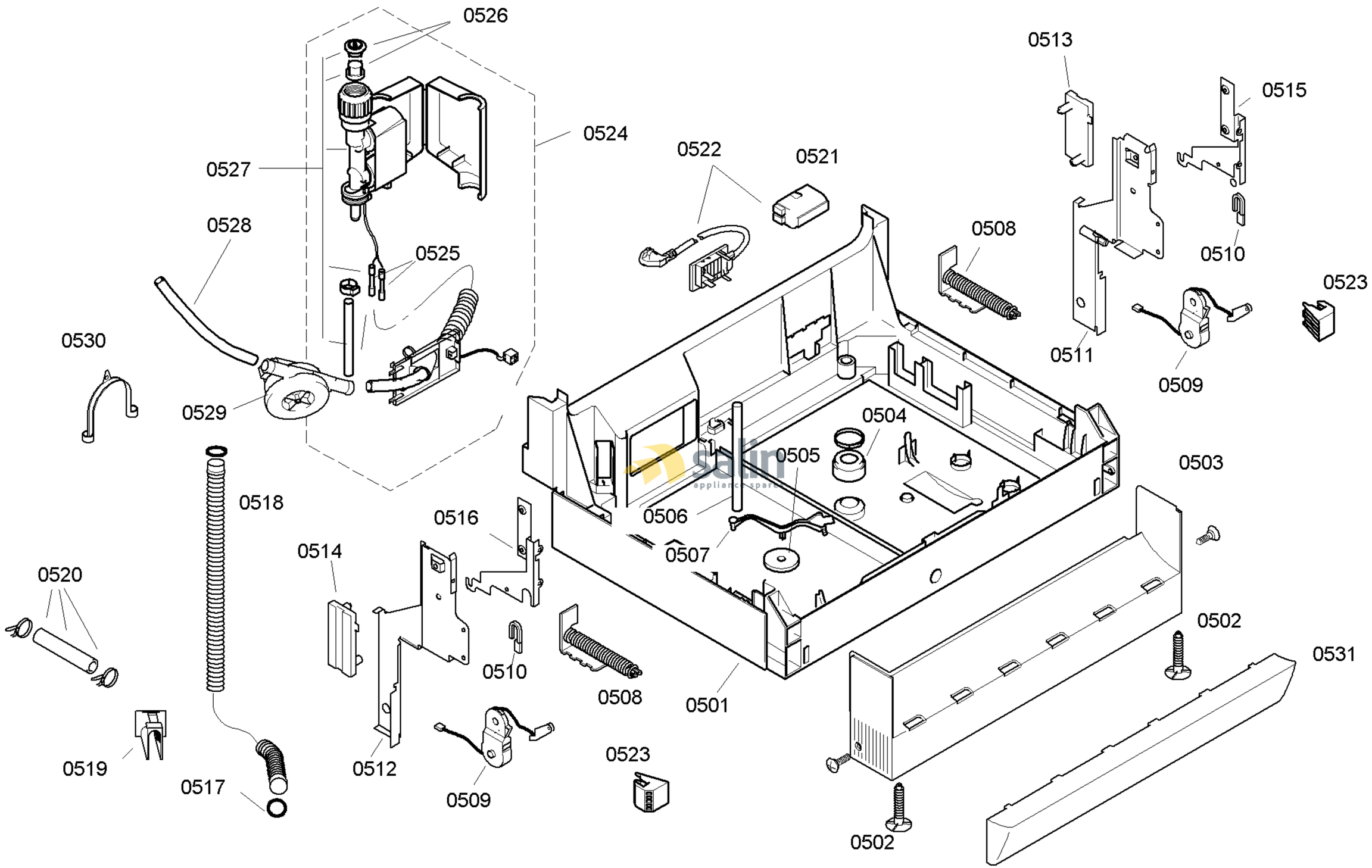

58300000119305 aet 000 b 5/6

FAMILY : SGS45M32II
MODEL NO: SGS45M32II/75
Check Position No/Part No or Replacement No

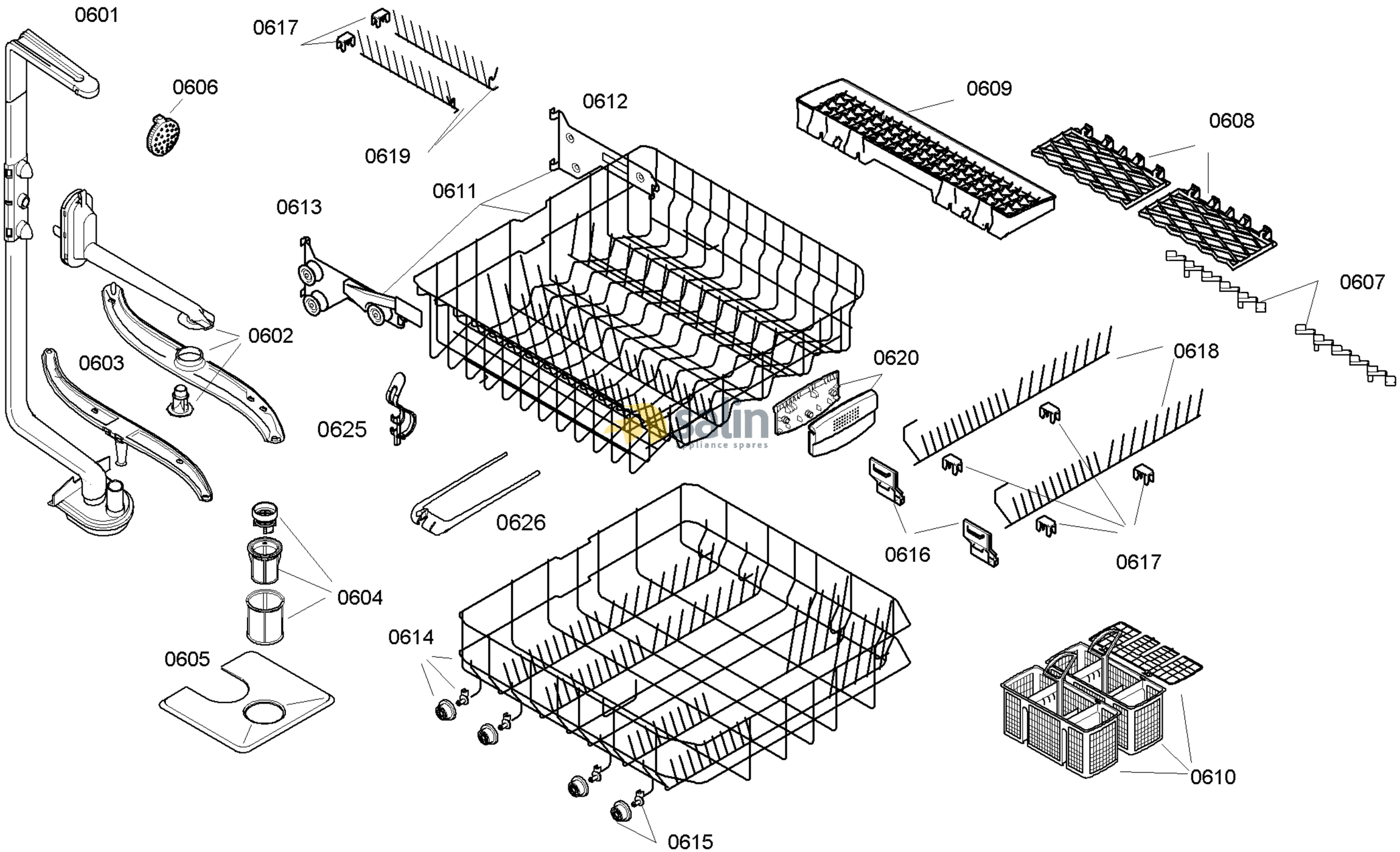

58300000119305 aet 000 b 6/6

FAMILY : SGS45M32II
MODEL NO: SGS45M32II/75
Check Position No/Part No or Replacement No