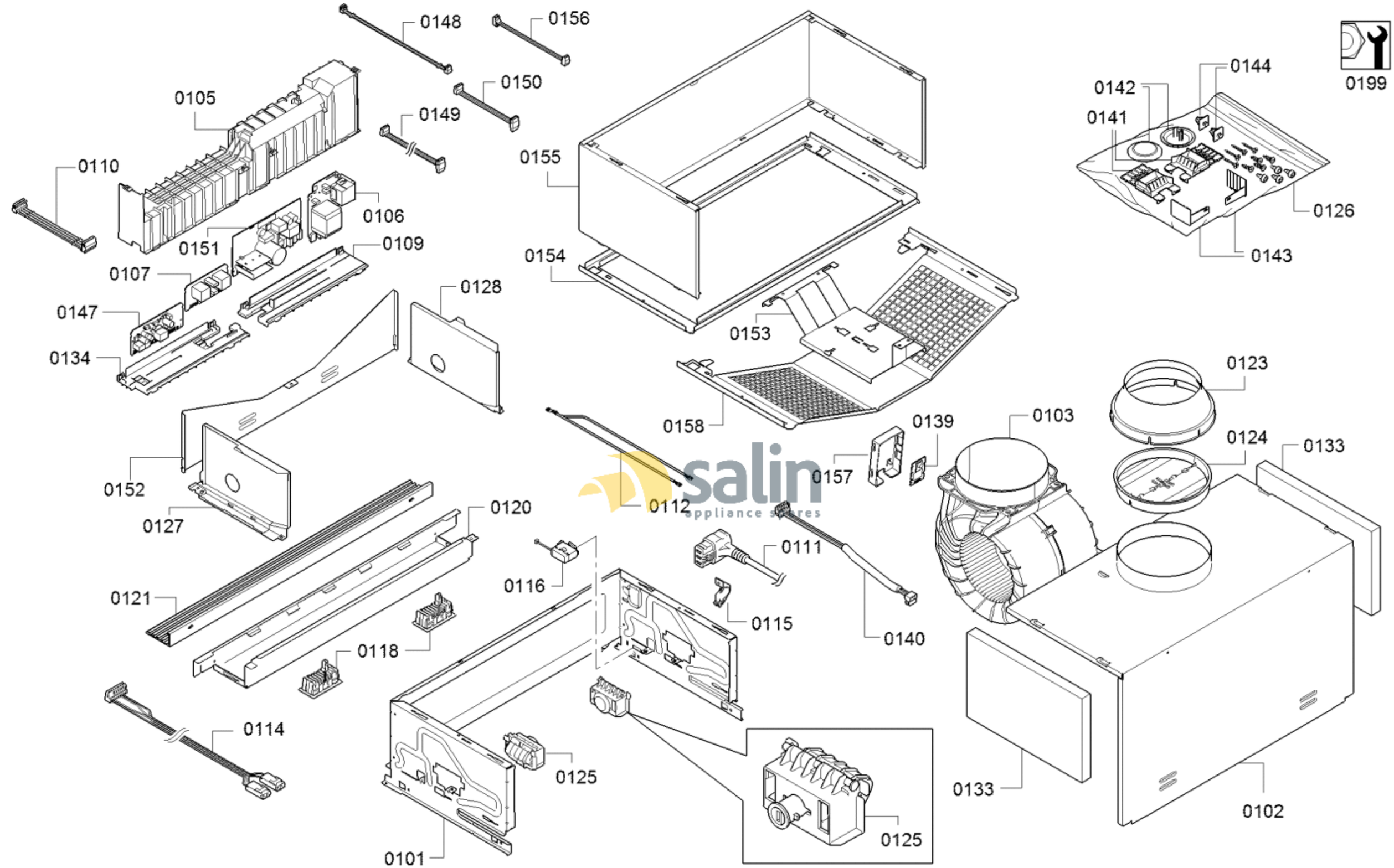

58300000195961 aet 000 b 1/2

FAMILY : DFS061K50W

MODEL NO: DFS061K50W/04

Check Position No/Part No or Replacement No

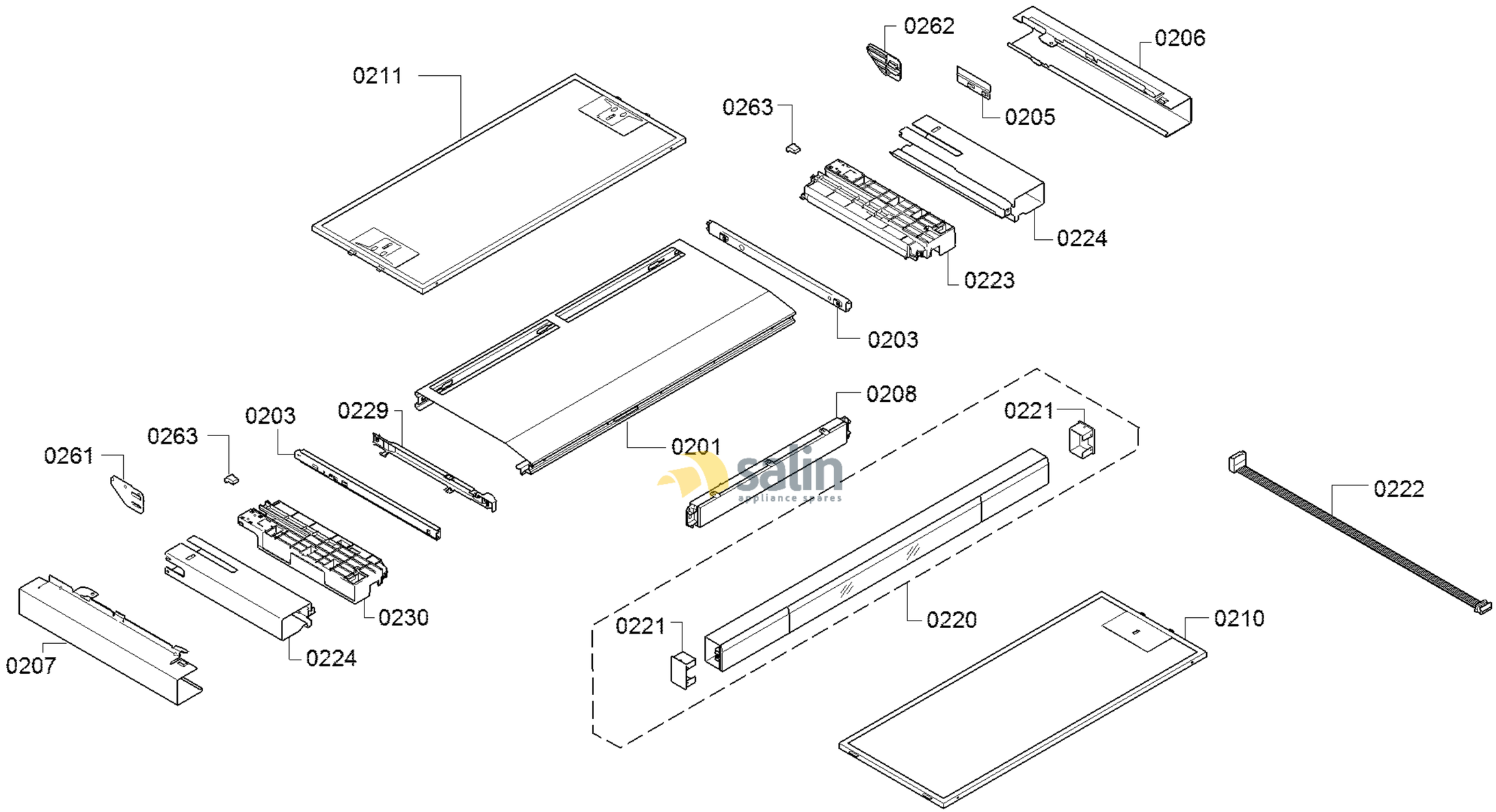

58300000195961 aet 000 b 2/2

FAMILY : DFS061K50W
MODEL NO: DFS061K50W/04
Check Position No/Part No or Replacement No