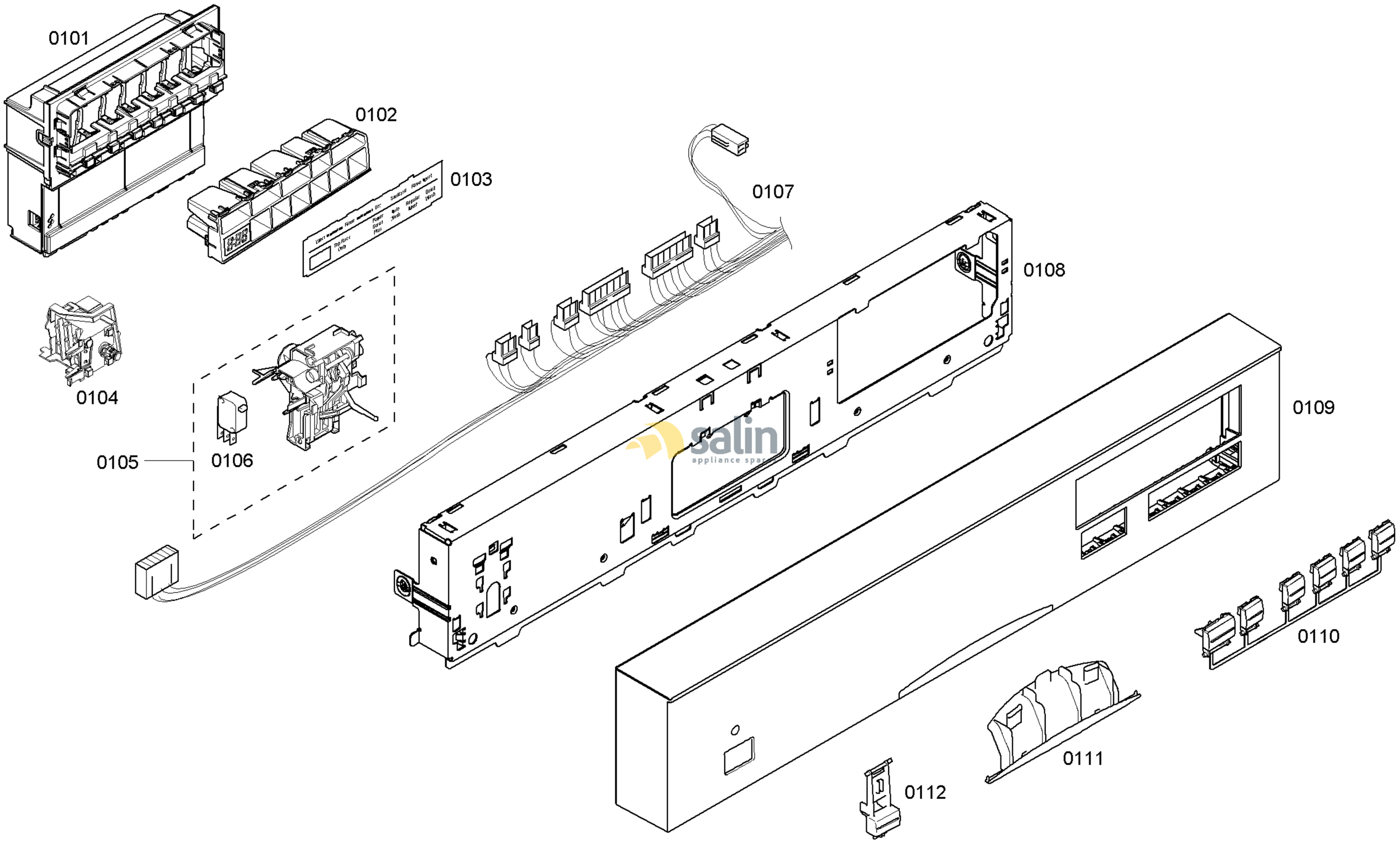


58300000120043 aet 000 c 1/6

FAMILY : SHE47C06UC
MODEL NO: SHE47C06UC/33
Check Position No/Part No or Replacement No

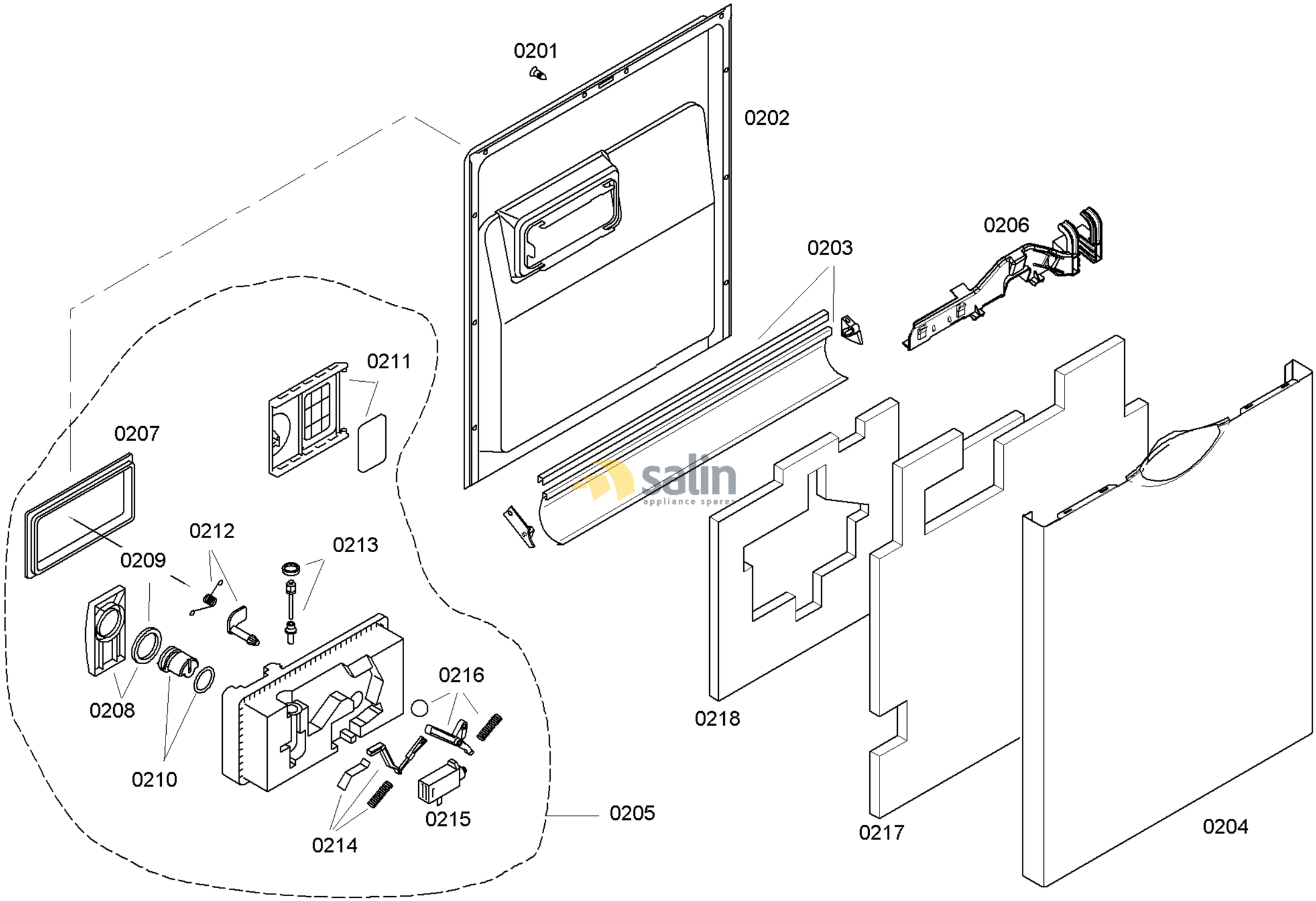


58300000120043 aet 000 c 2/6

FAMILY : SHE47C06UC
MODEL NO: SHE47C06UC/33
Check Position No/Part No or Replacement No

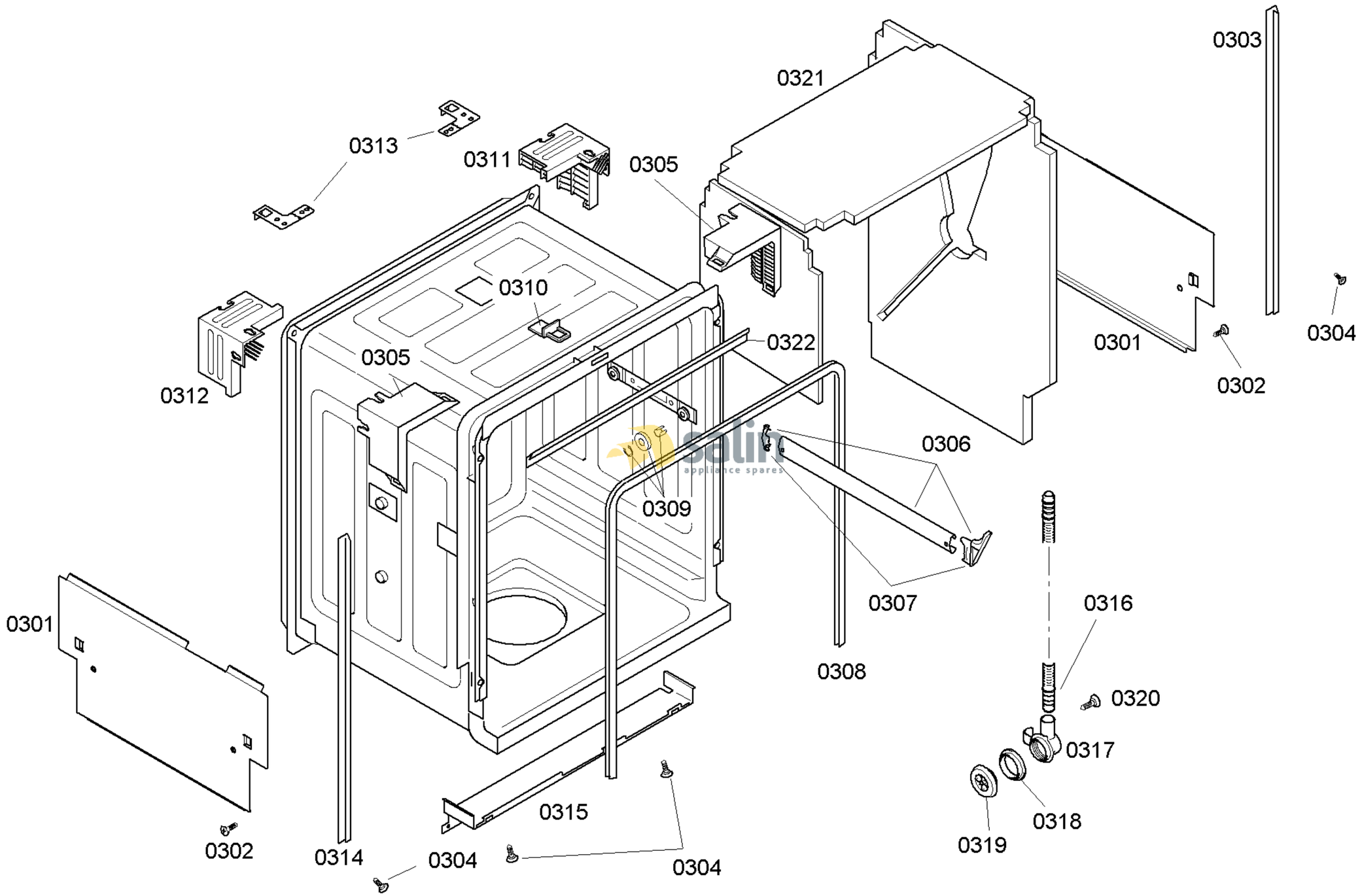


58300000120043 aet 000 c 3/6

FAMILY : SHE47C06UC
MODEL NO: SHE47C06UC/33
Check Position No/Part No or Replacement No

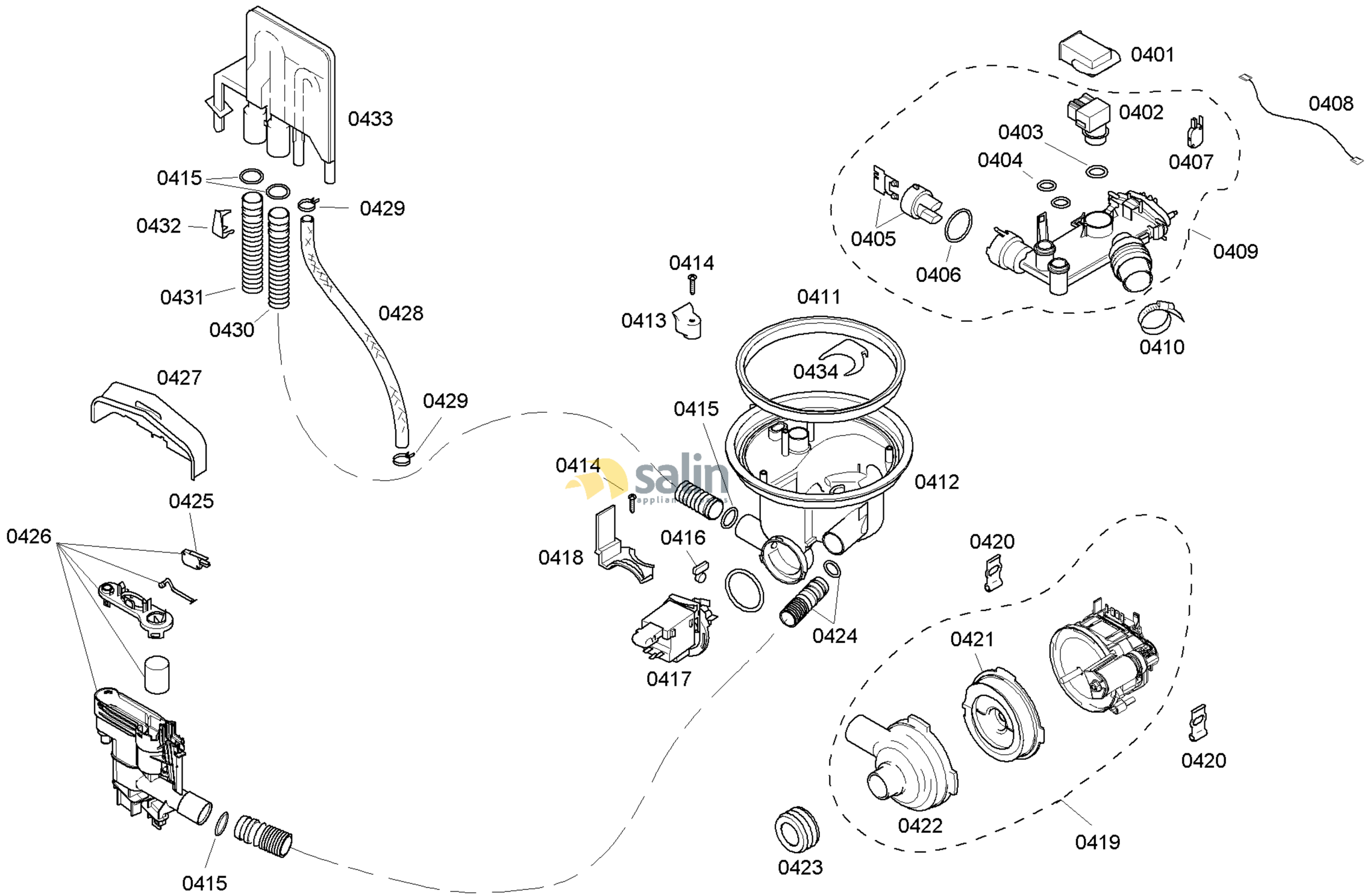


58300000120043 aet 000 c 4/6

FAMILY : SHE47C06UC
MODEL NO: SHE47C06UC/33
Check Position No/Part No or Replacement No

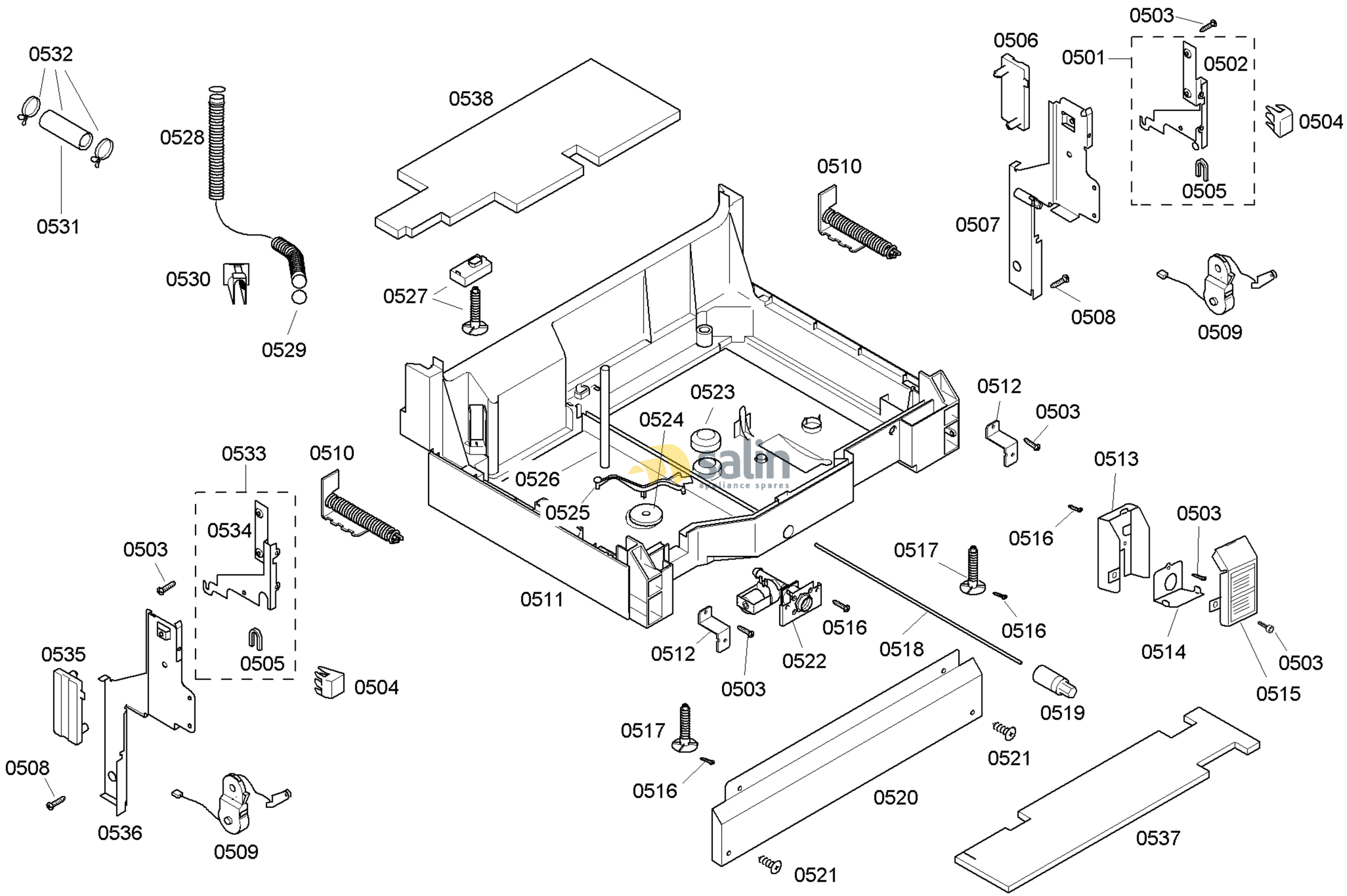


58300000120043 aet 000 c 5/6

FAMILY : SHE47C06UC
MODEL NO: SHE47C06UC/33
Check Position No/Part No or Replacement No

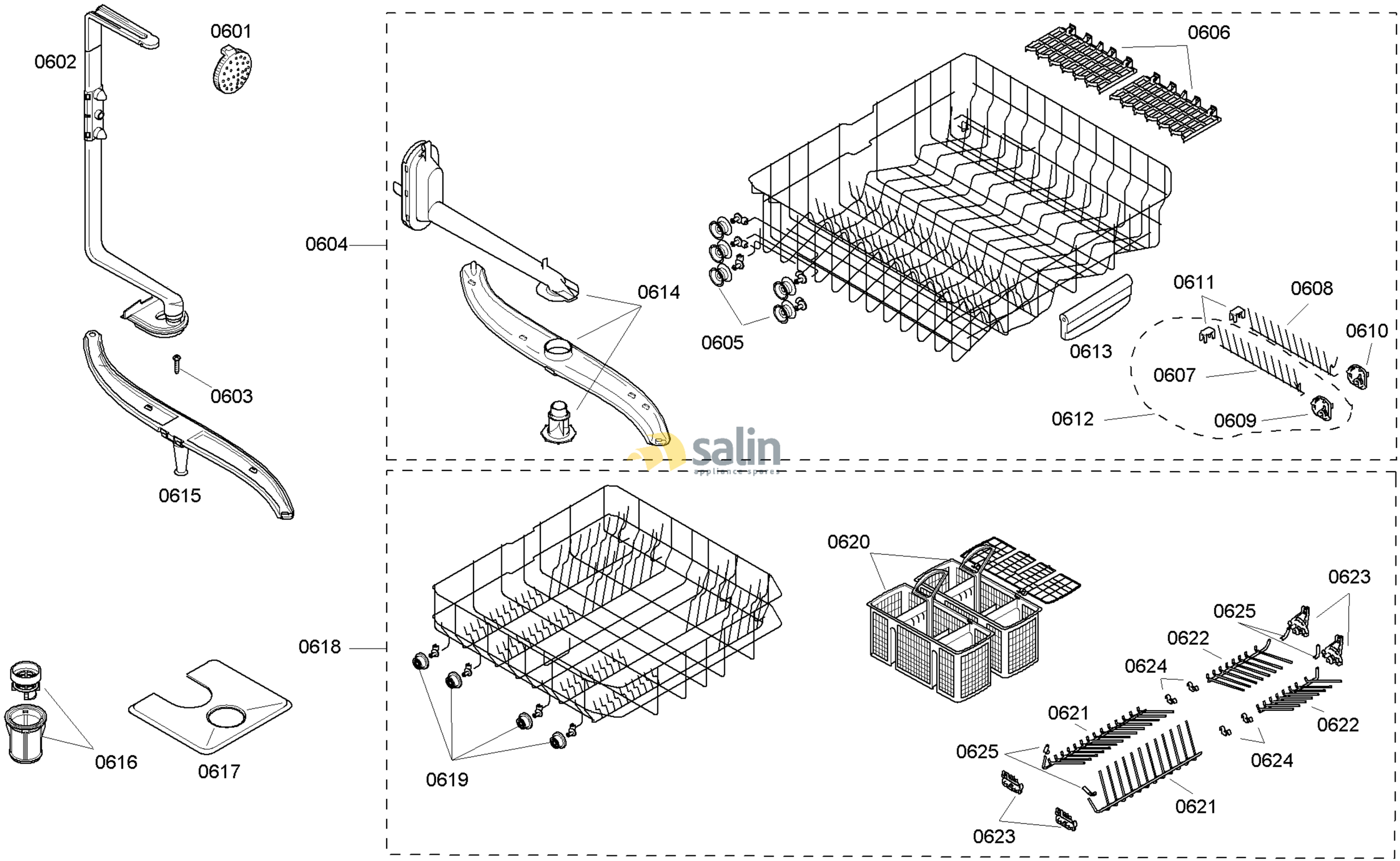


salin
appliance spares

58300000120043 aet 000 c 6/6

FAMILY : SHE47C06UC
MODEL NO: SHE47C06UC/33
Check Position No/Part No or Replacement No