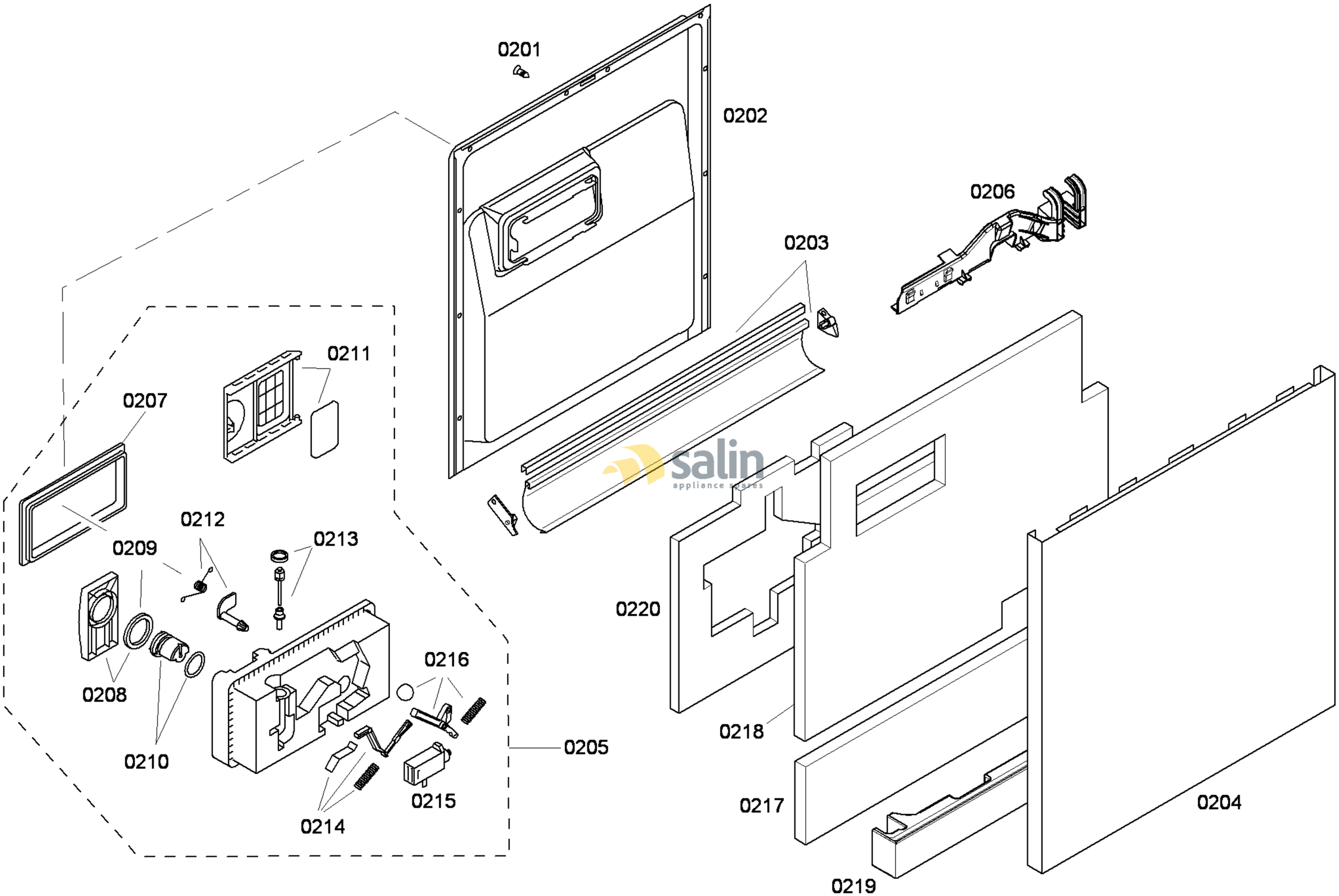

583000001141 23 aet 000 b 2/6

FAMILY : SHE53L05UC
MODEL NO: SHE53L05UC/52
Check Position No/Part No or Replacement No

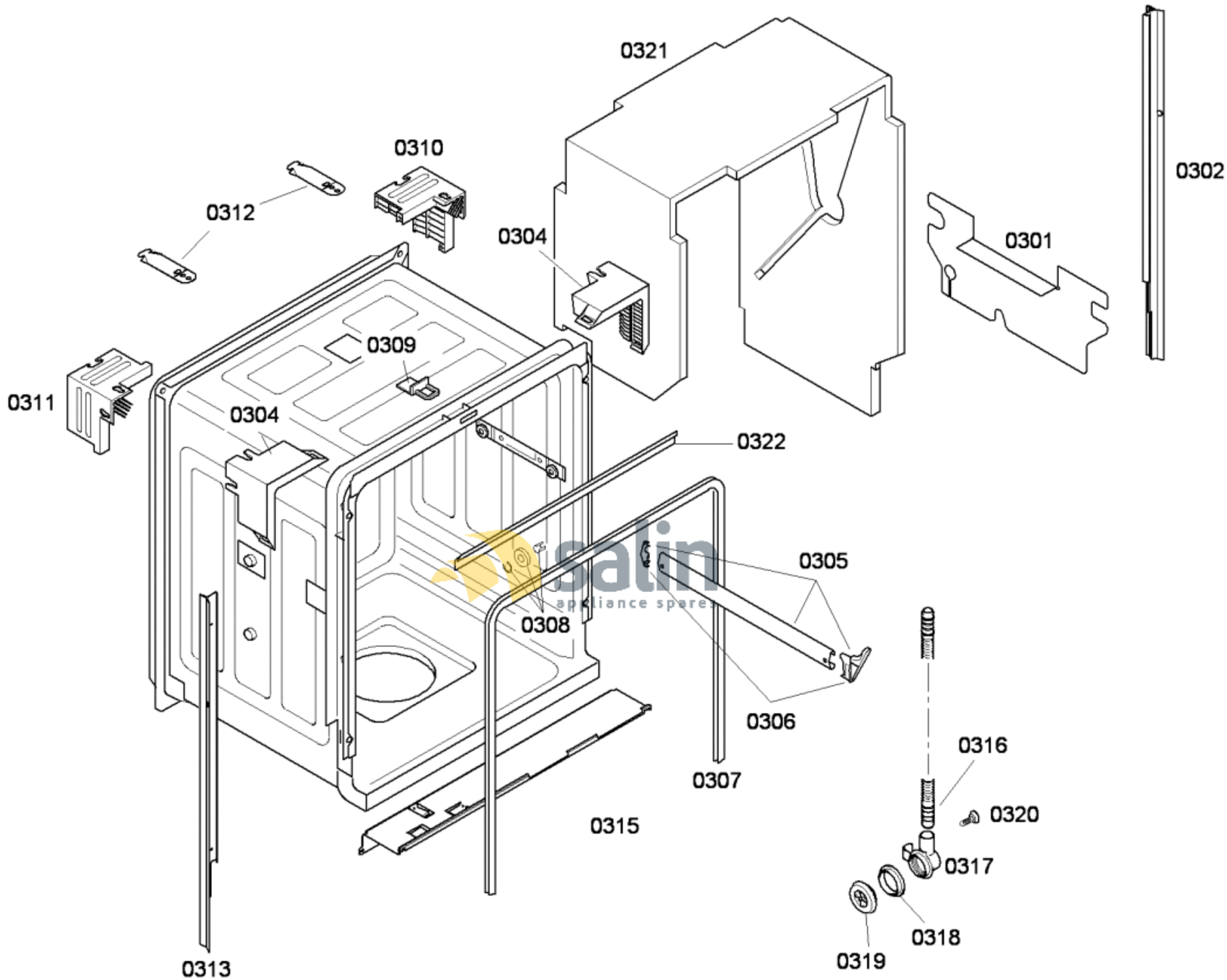

58300000141123 aet 000 b 3/6

FAMILY : SHE53L05UC

MODEL NO: SHE53L05UC/52

Check Position No/Part No or Replacement No

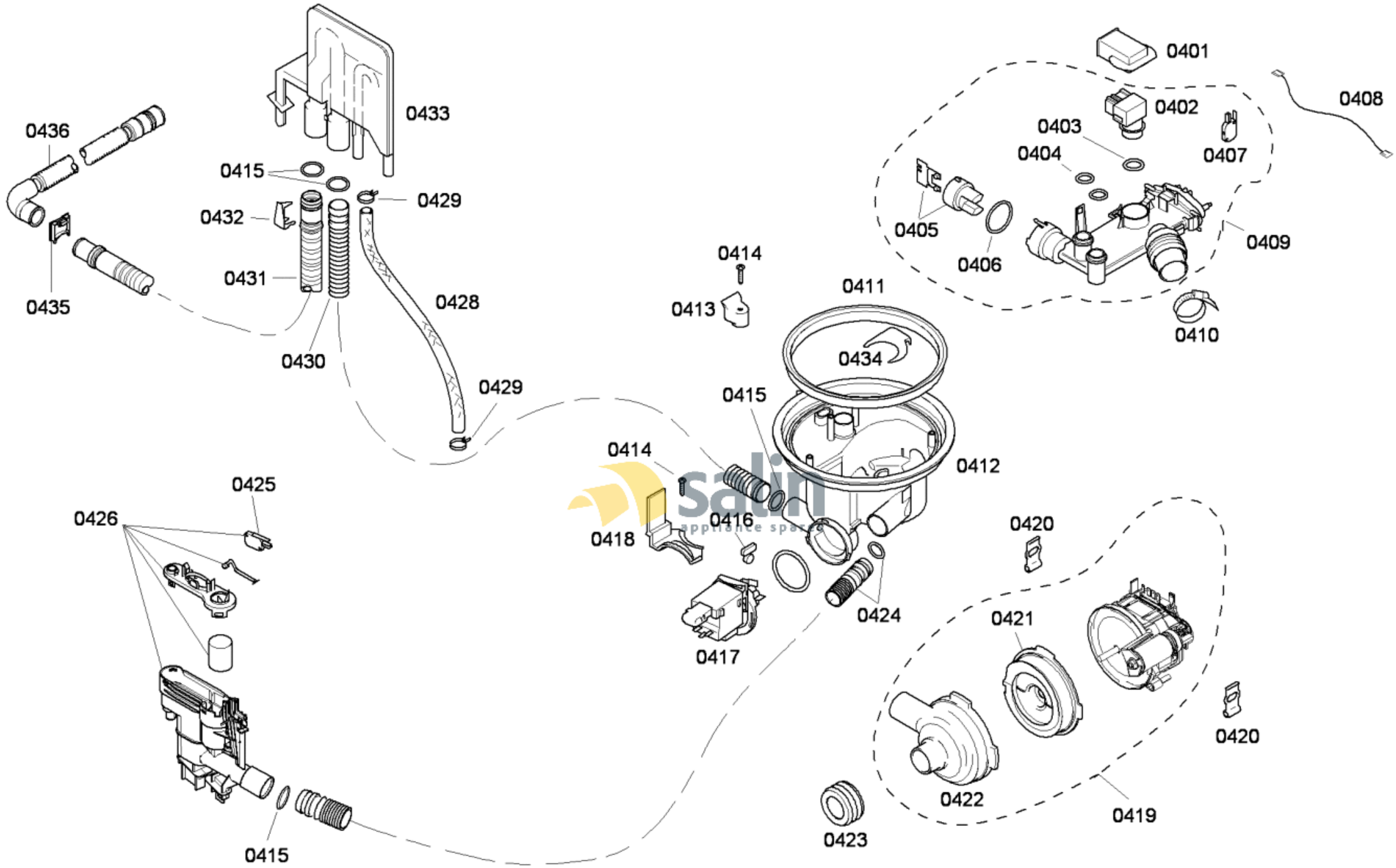

58300000141123 aet 000 b 4/6

FAMILY : SHE53L05UC

MODEL NO: SHE53L05UC/52

Check Position No/Part No or Replacement No

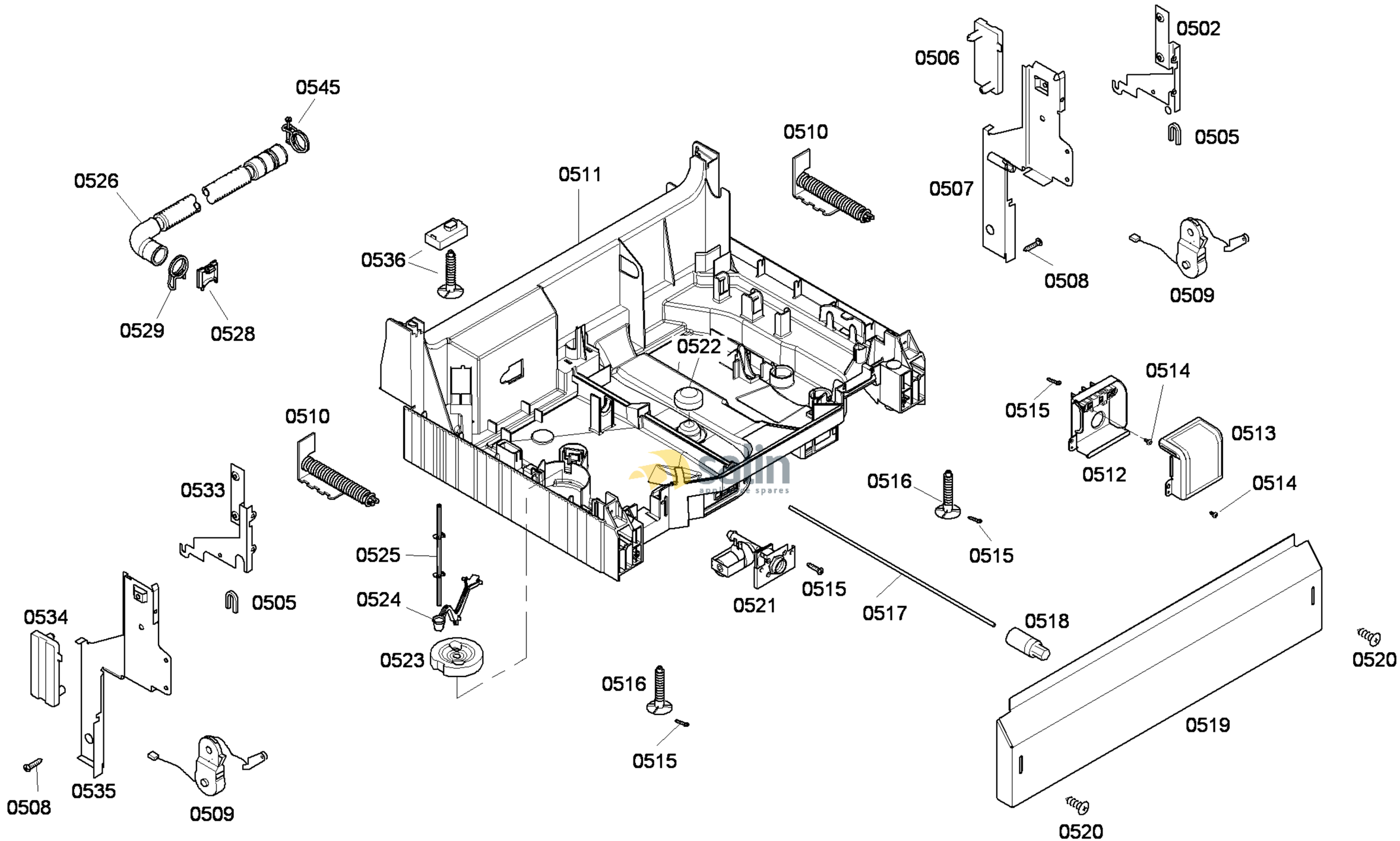

58300000141123 aet 000 b 5/6

FAMILY : SHE53L05UC
MODEL NO: SHE53L05UC/52
Check Position No/Part No or Replacement No

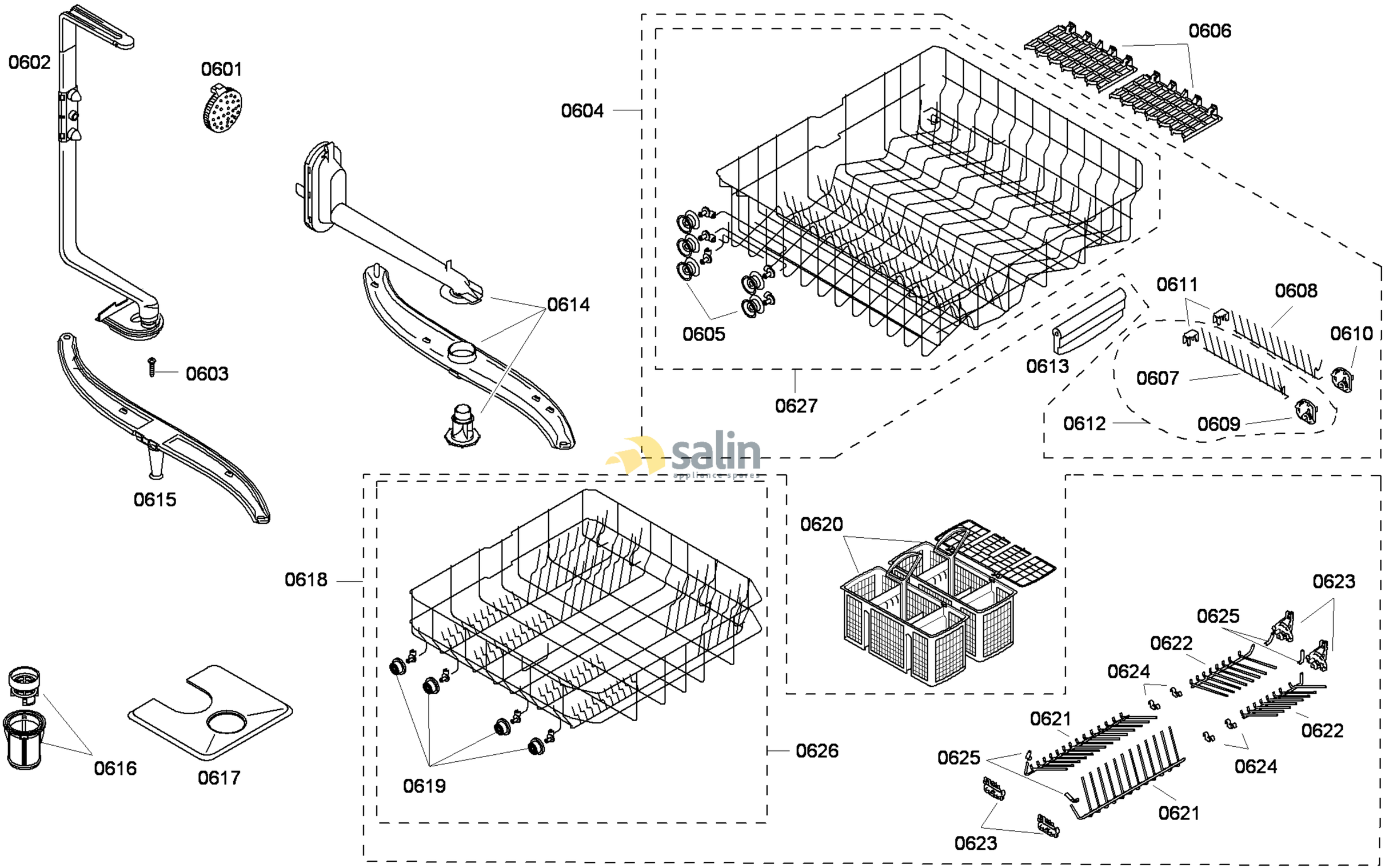

58300000141123 aet 000 b 6/6

FAMILY : SHE53L05UC
MODEL NO: SHE53L05UC/52
Check Position No/Part No or Replacement No