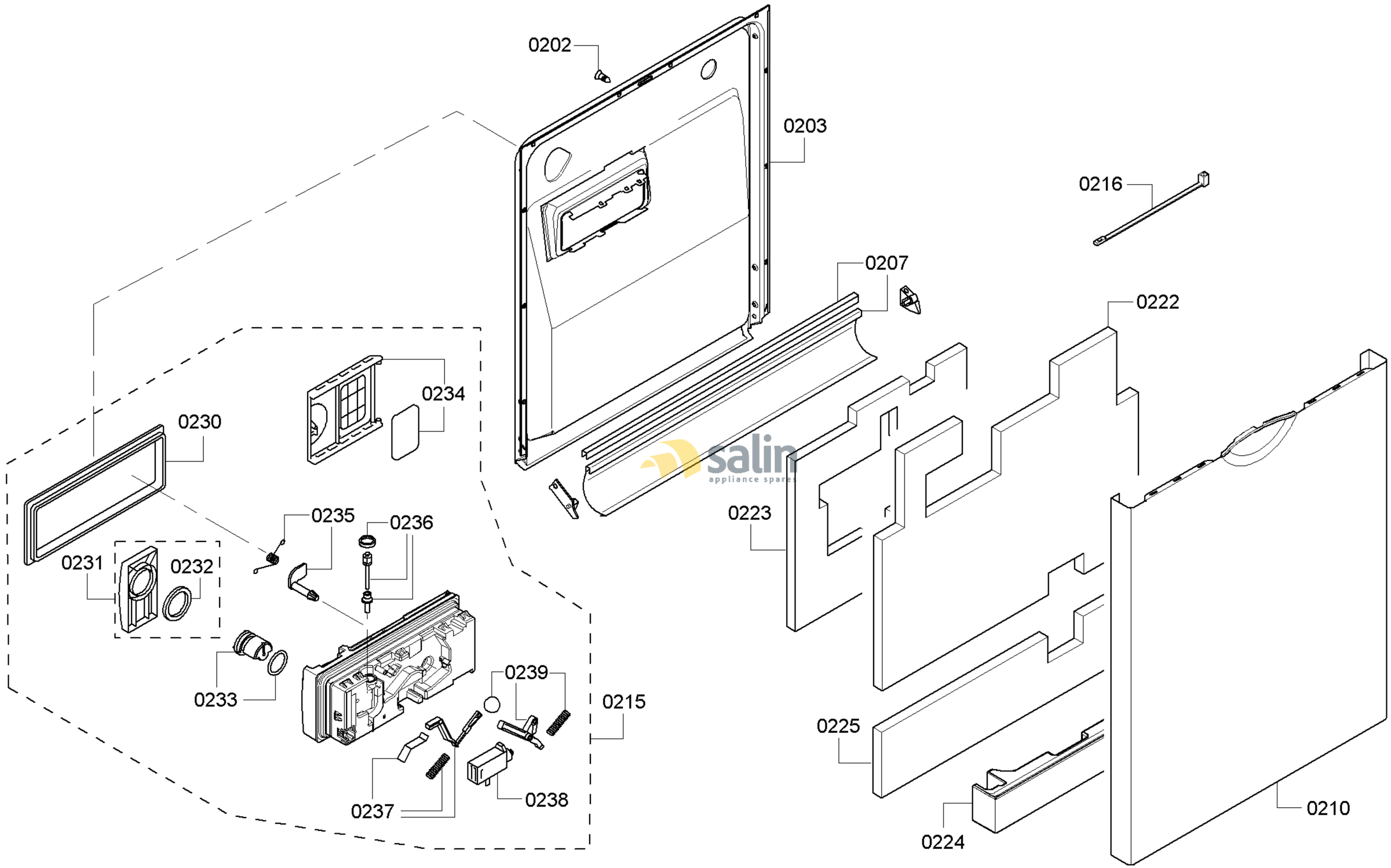

58300000159619 aet 000 a 2/6

FAMILY : SHE55RF5UC
MODEL NO: SHE55RF5UC/63
Check Position No/Part No or Replacement No

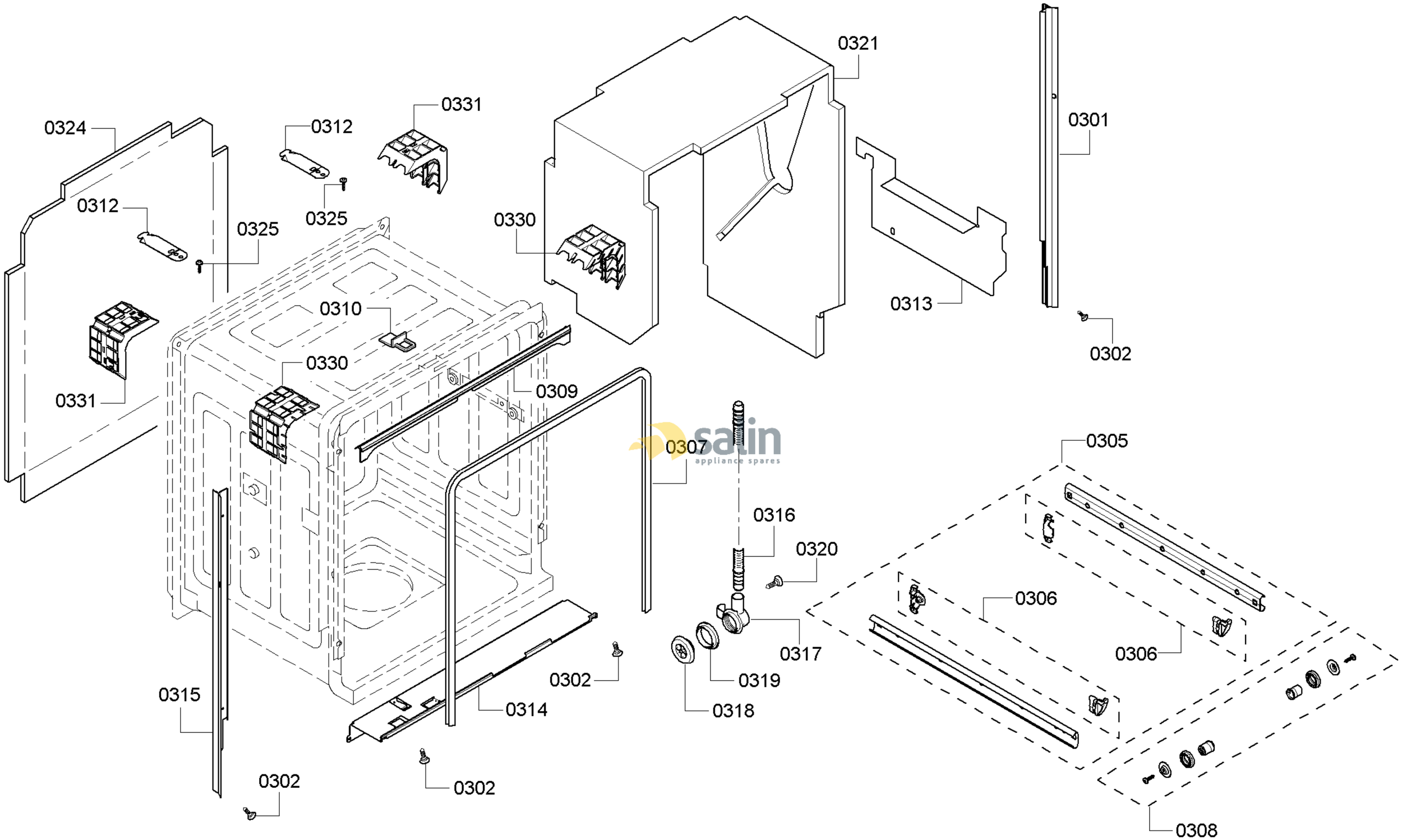

58300000159619 aet 000 a 3/6

FAMILY : SHE55RF5UC
MODEL NO: SHE55RF5UC/63
Check Position No/Part No or Replacement No

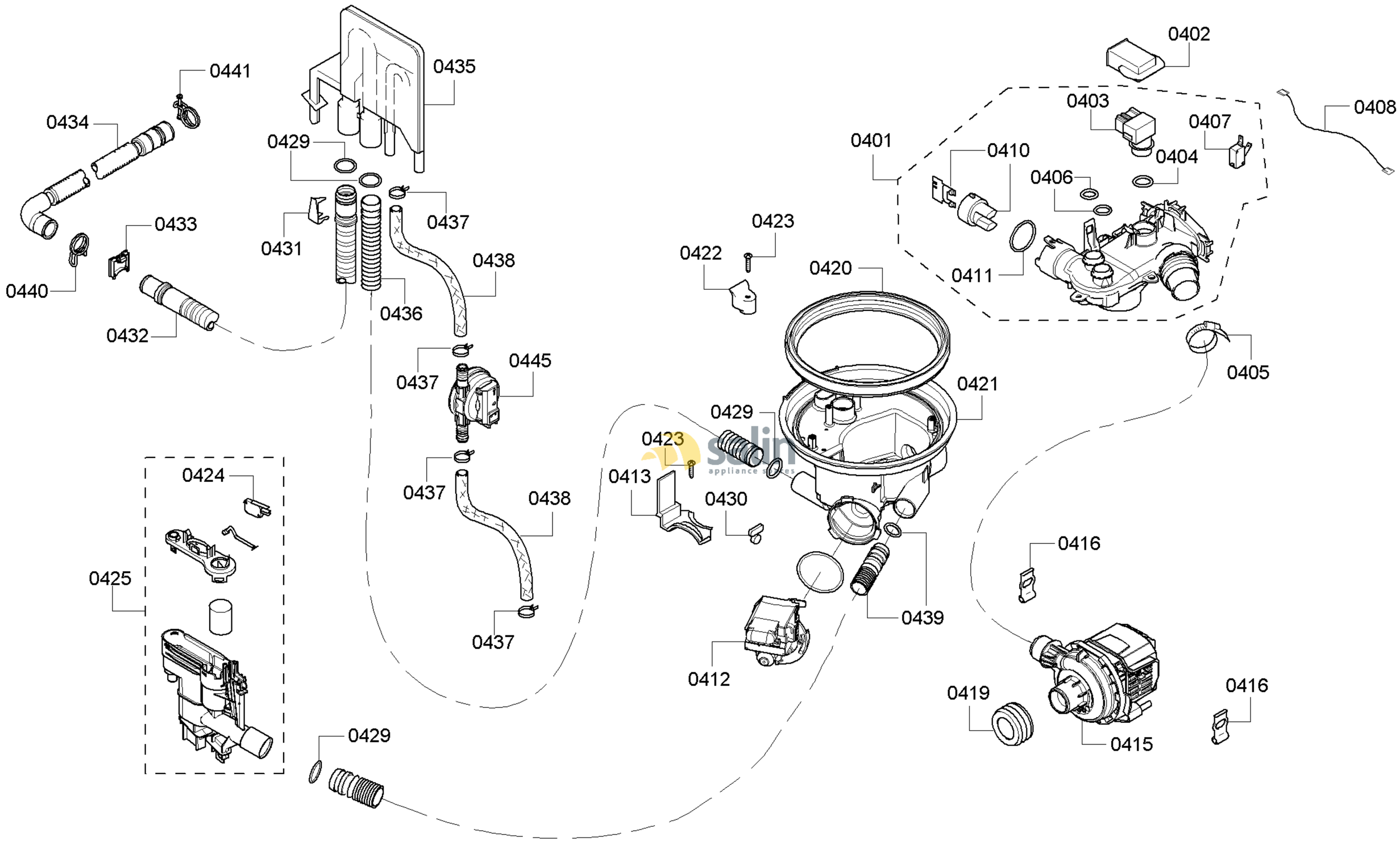

58300000159619 aet 000 a 4/6

FAMILY : SHE55RF5UC
MODEL NO: SHE55RF5UC/63
Check Position No/Part No or Replacement No

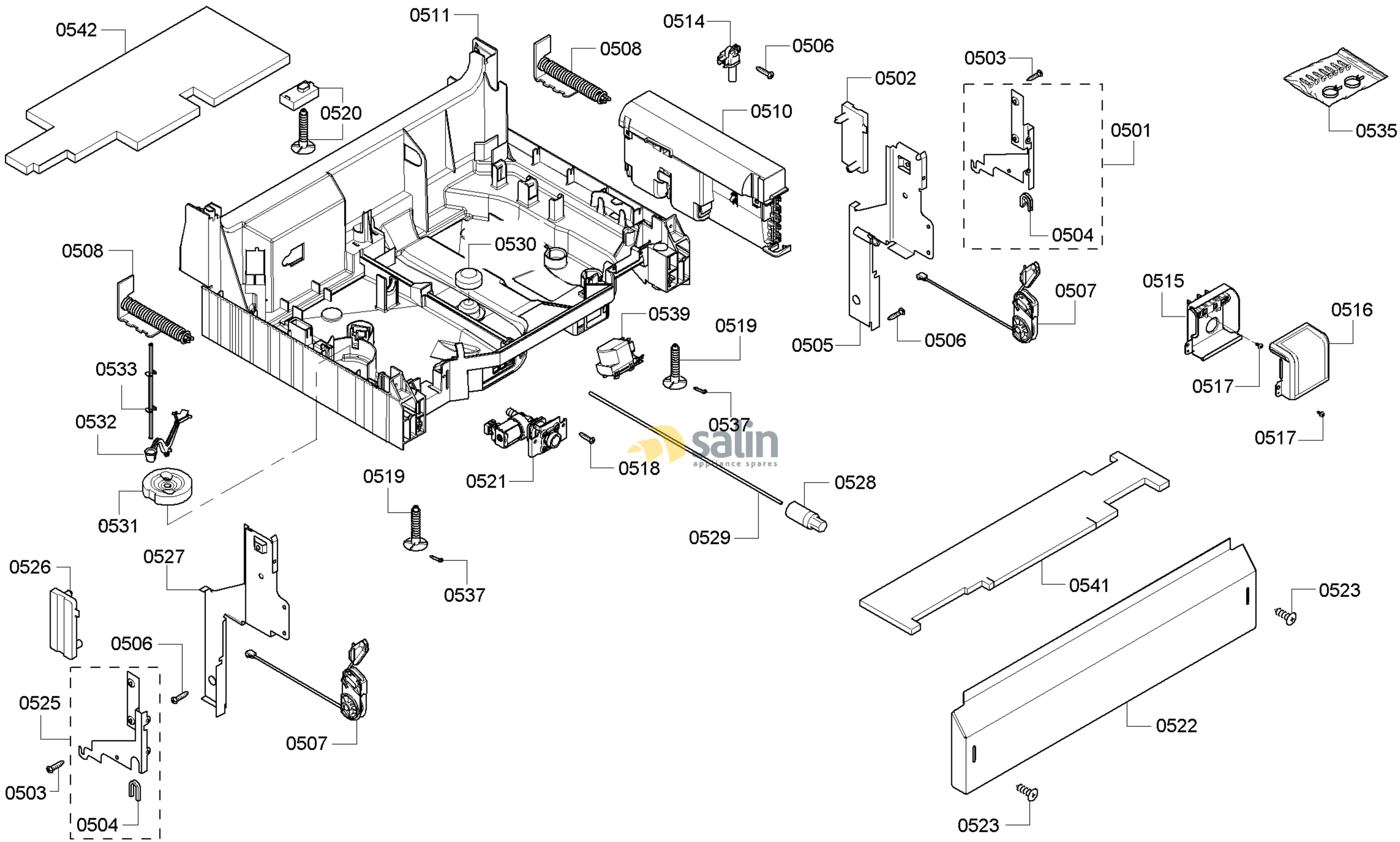

58300000159619 aet 000 a 5/6

FAMILY : SHE55RF5UC
MODEL NO: SHE55RF5UC/63
Check Position No/Part No or Replacement No

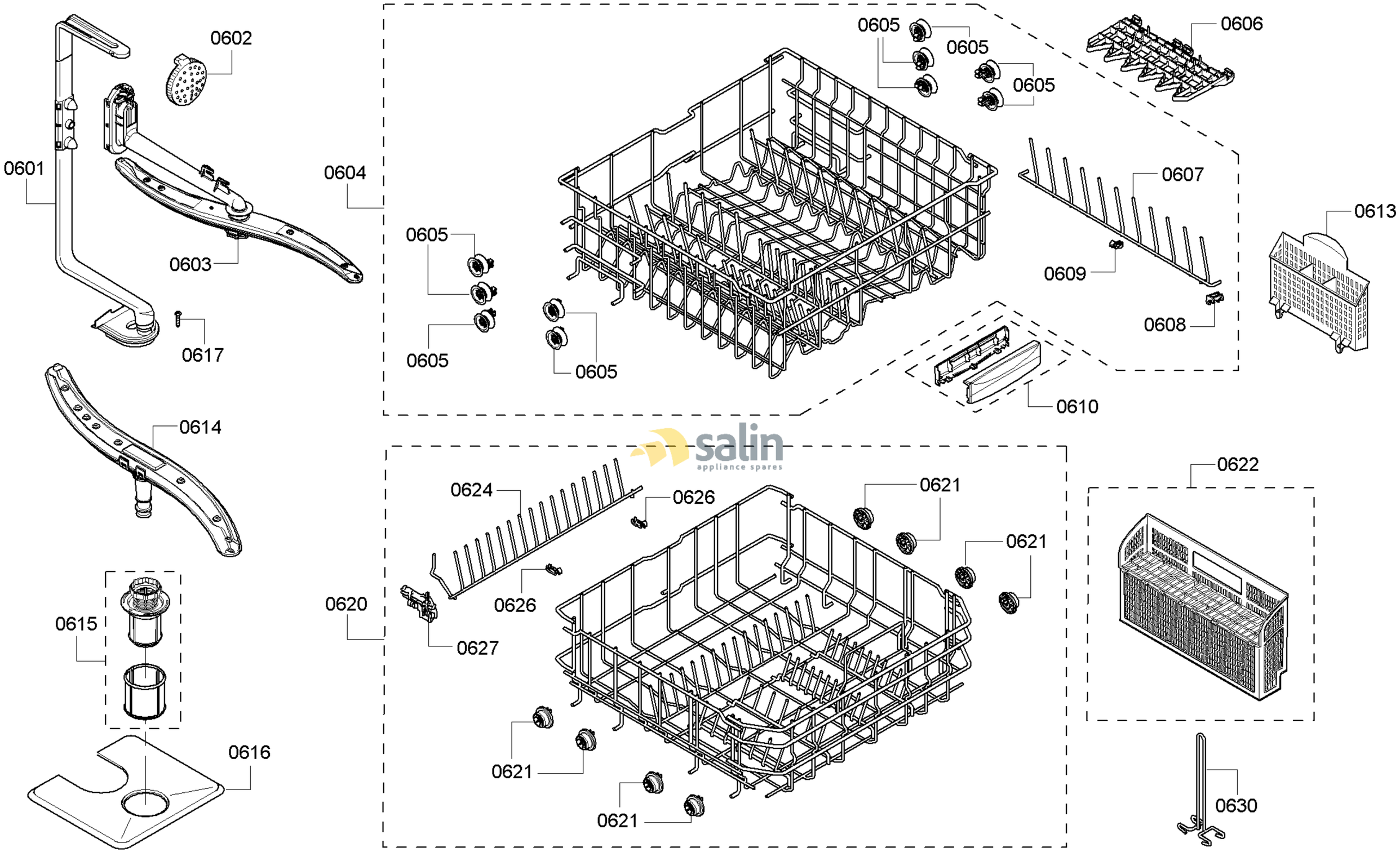

58300000159619 aet 000 a 6/6

FAMILY : SHE55RF5UC
MODEL NO: SHE55RF5UC/63
Check Position No/Part No or Replacement No