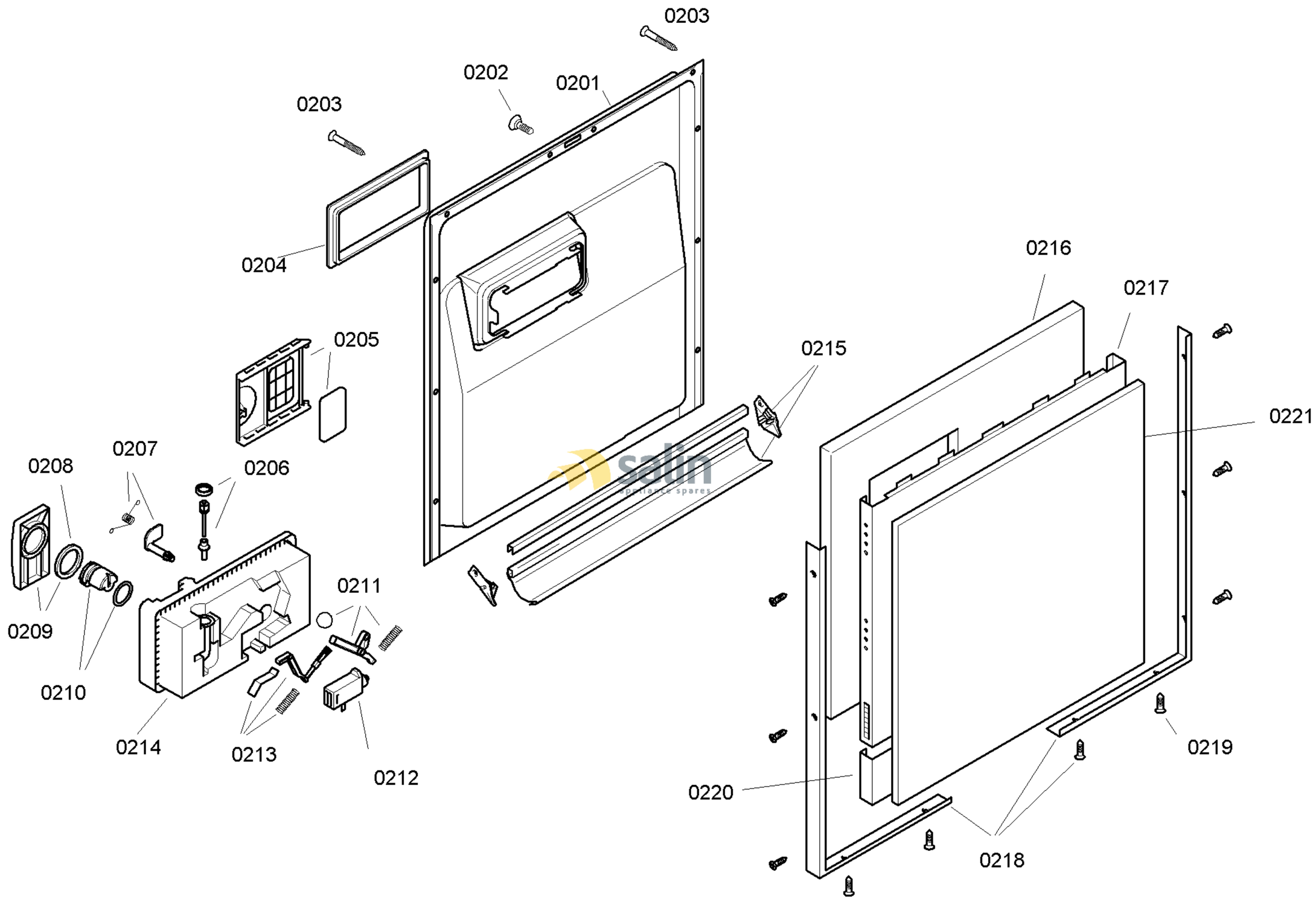

58300000109047 aet 000 b 2/6

FAMILY : SGU55M42EP
MODEL NO: SGU55M42EP/74
Check Position No/Part No or Replacement No

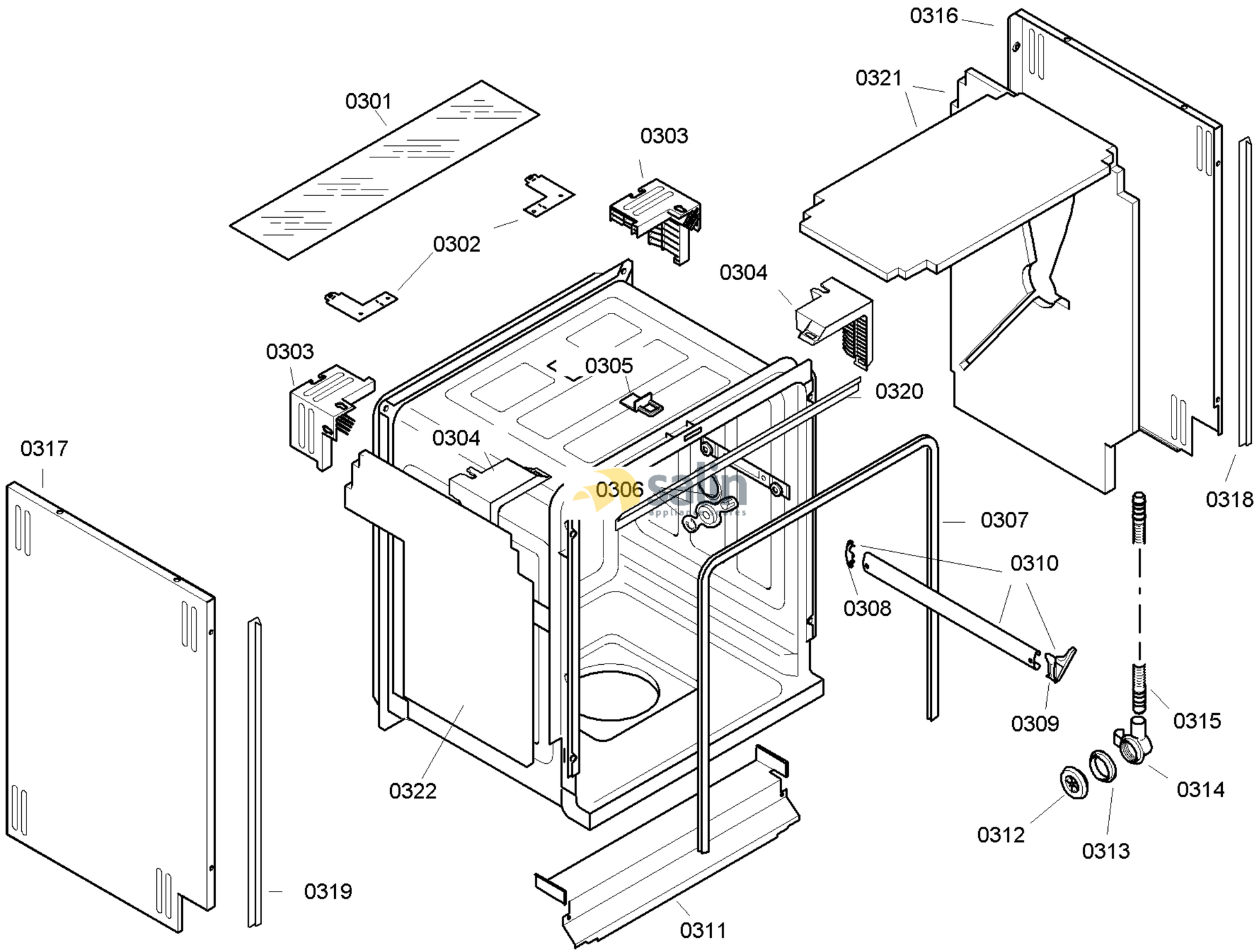

58300000109047 aet 000 b 3/6

FAMILY : SGU55M42EP
MODEL NO: SGU55M42EP/74
Check Position No/Part No or Replacement No

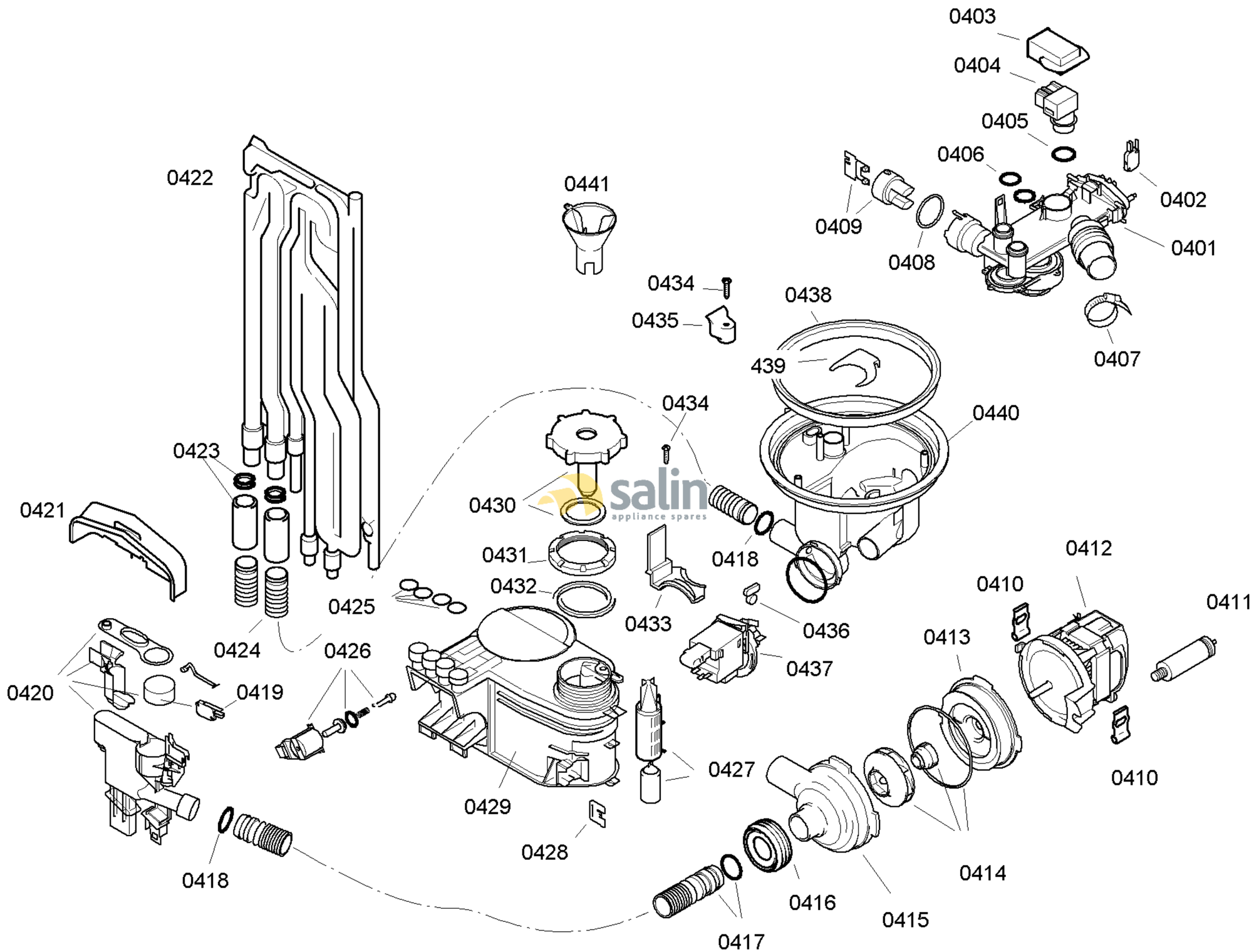

58300000109047 aet 000 b 4/6

FAMILY : SGU55M42EP
MODEL NO: SGU55M42EP/74
Check Position No/Part No or Replacement No

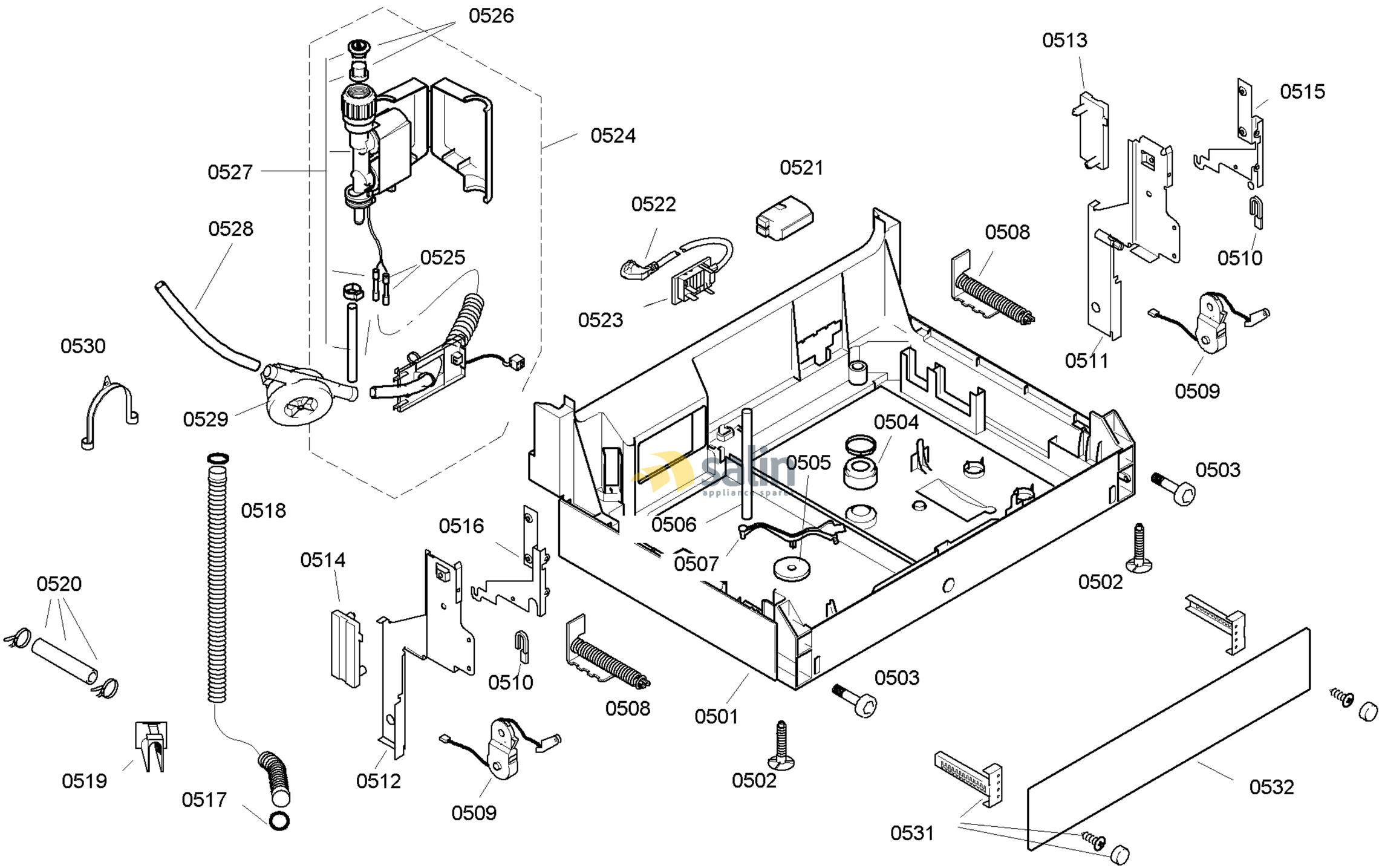

58300000109047 aet 000 b 5/6

FAMILY : SGU55M42EP
MODEL NO: SGU55M42EP/74
Check Position No/Part No or Replacement No

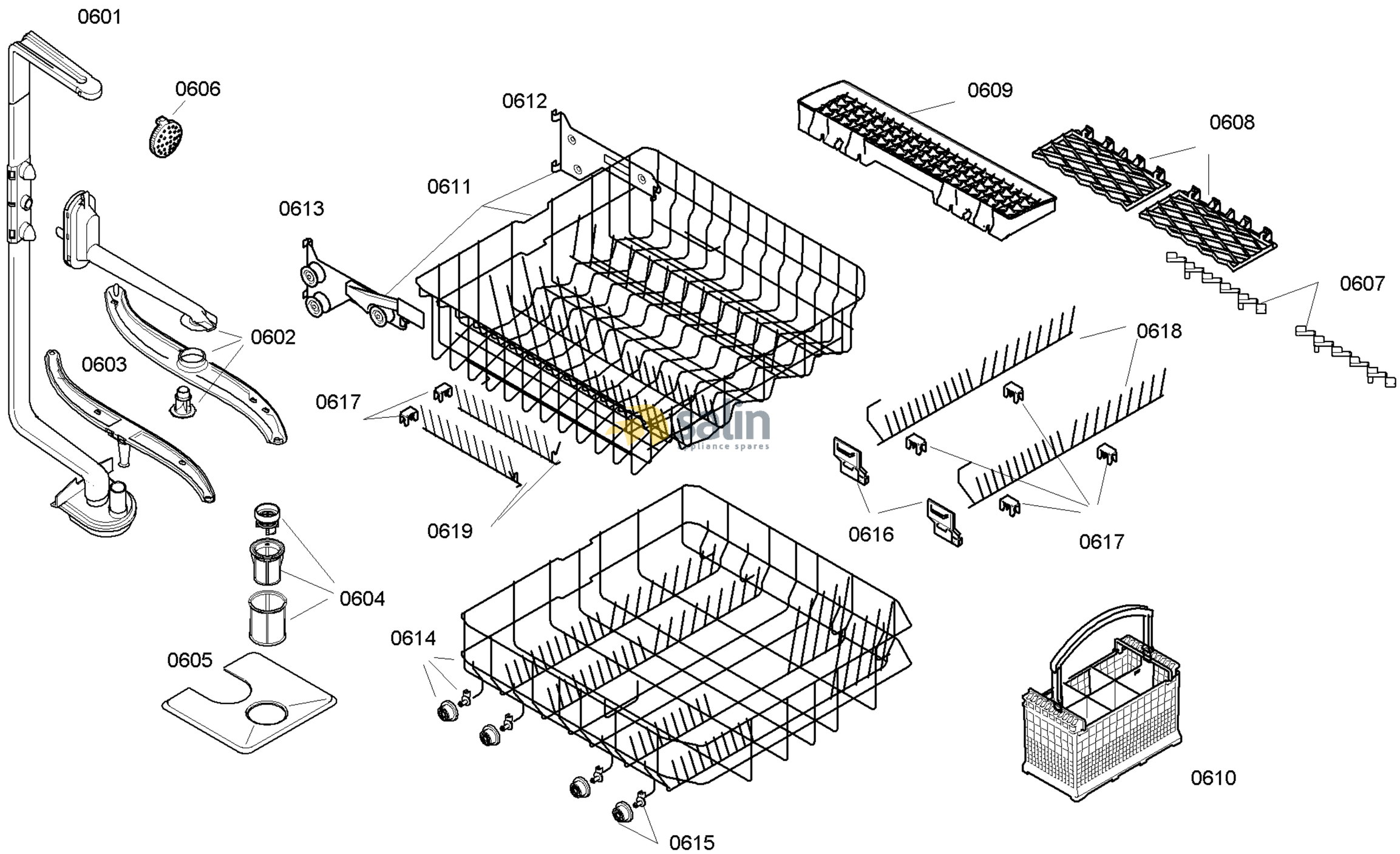

58300000109047 aet 000 b 6/6

FAMILY : SGU55M42EP
MODEL NO: SGU55M42EP/74
Check Position No/Part No or Replacement No