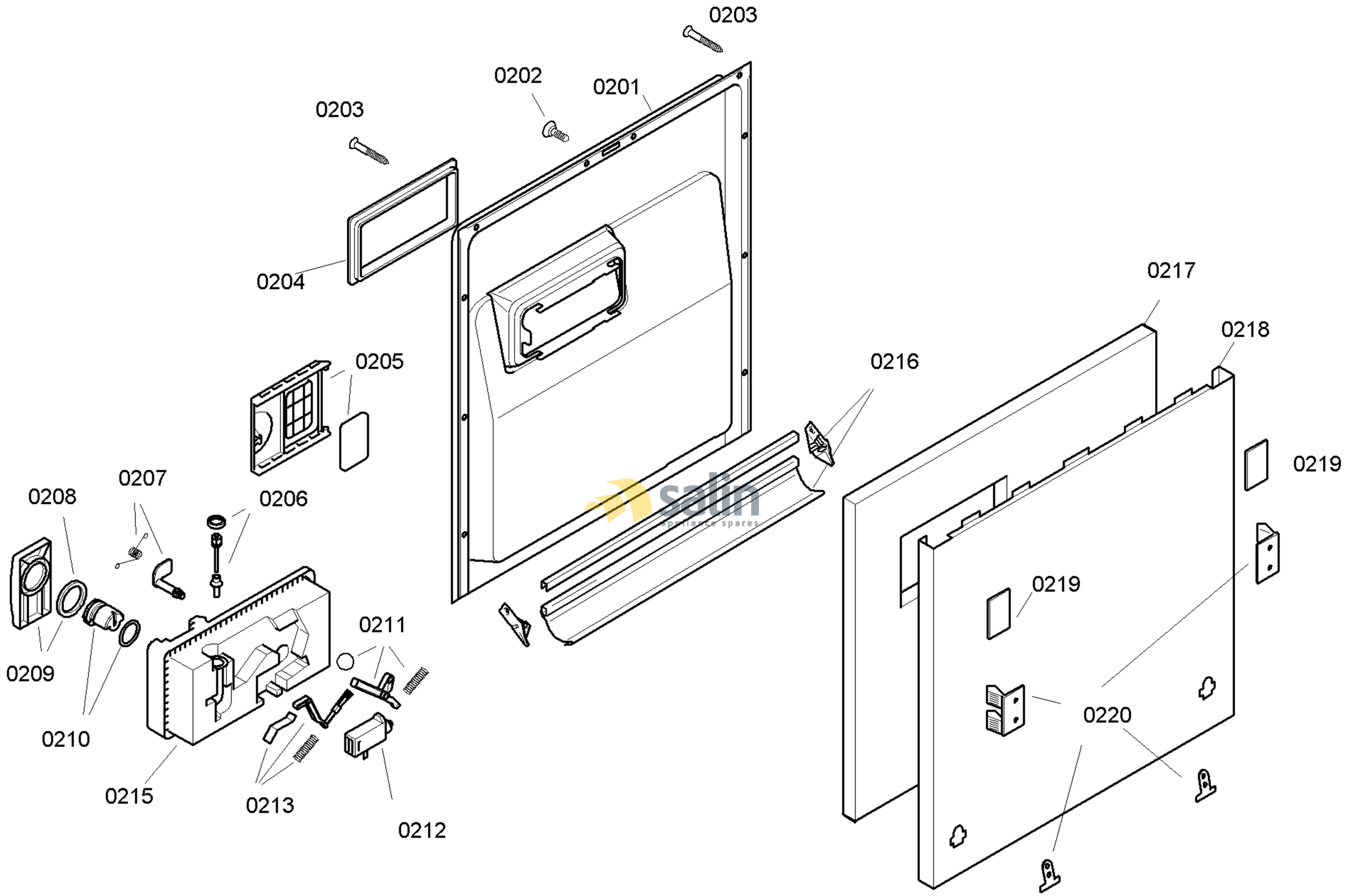

58300000119529 aet 000 b 2/6

FAMILY : SGI55E25EU
MODEL NO: SGI55E25EU/75
Check Position No/Part No or Replacement No

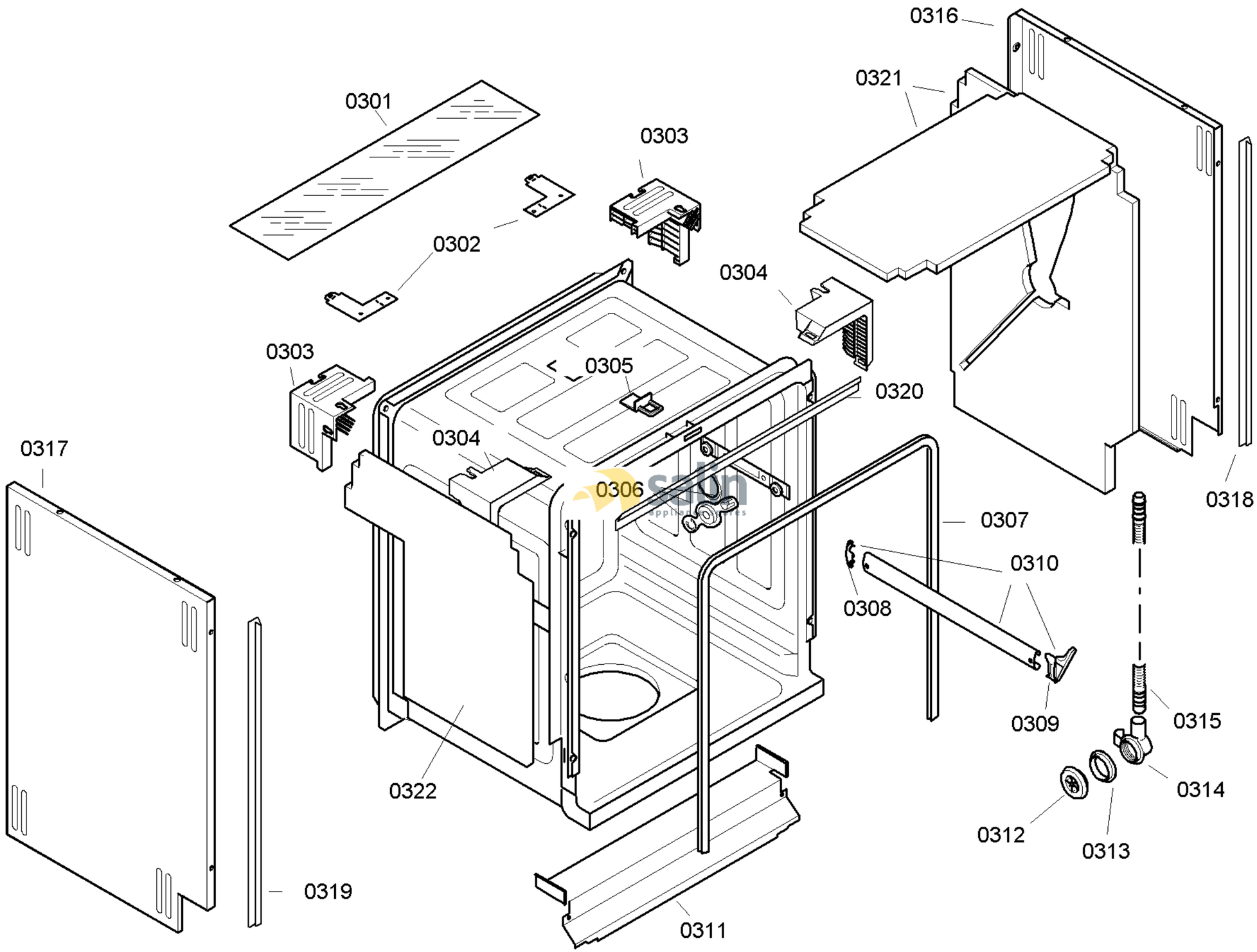

58300000119529 aet 000 b 3/6

FAMILY : SGI55E25EU
MODEL NO: SGI55E25EU/75
Check Position No/Part No or Replacement No

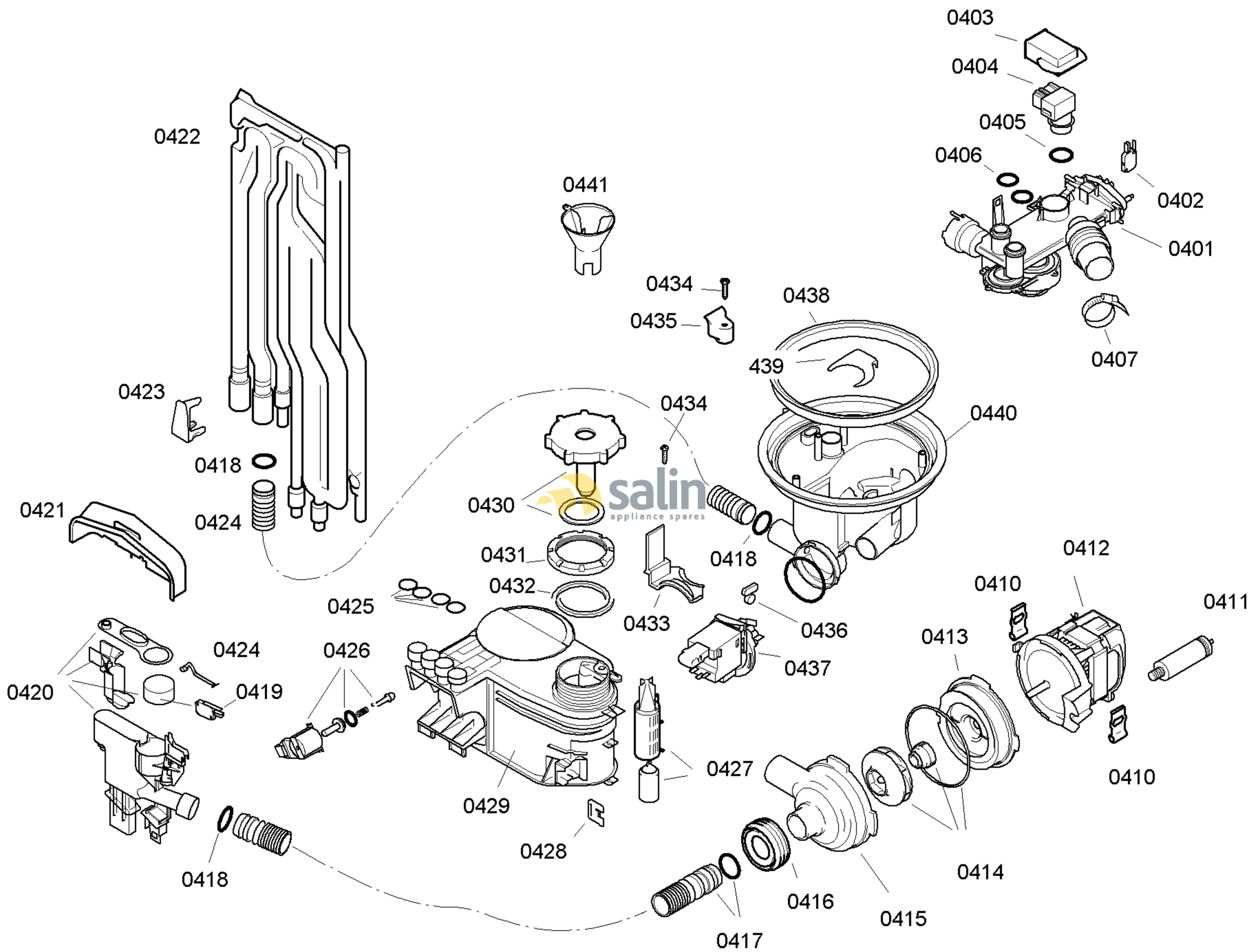

58300000119529 aet 000 b 4/6

FAMILY : SGI55E25EU
MODEL NO: SGI55E25EU/75
Check Position No/Part No or Replacement No

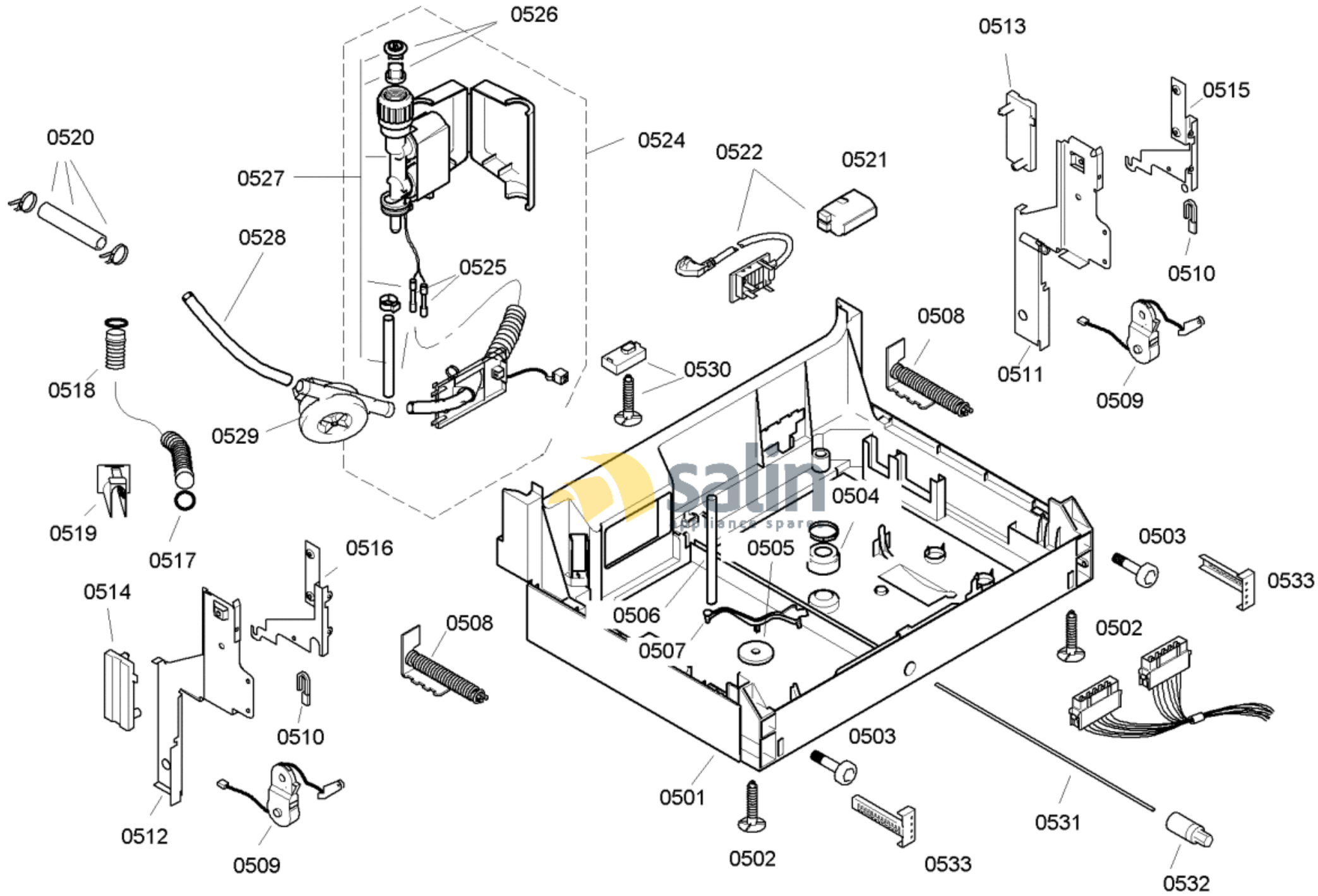

58300000119529 aet 000 b 5/6

FAMILY : SGI55E25EU

MODEL NO: SGI55E25EU/75

Check Position No/Part No or Replacement No

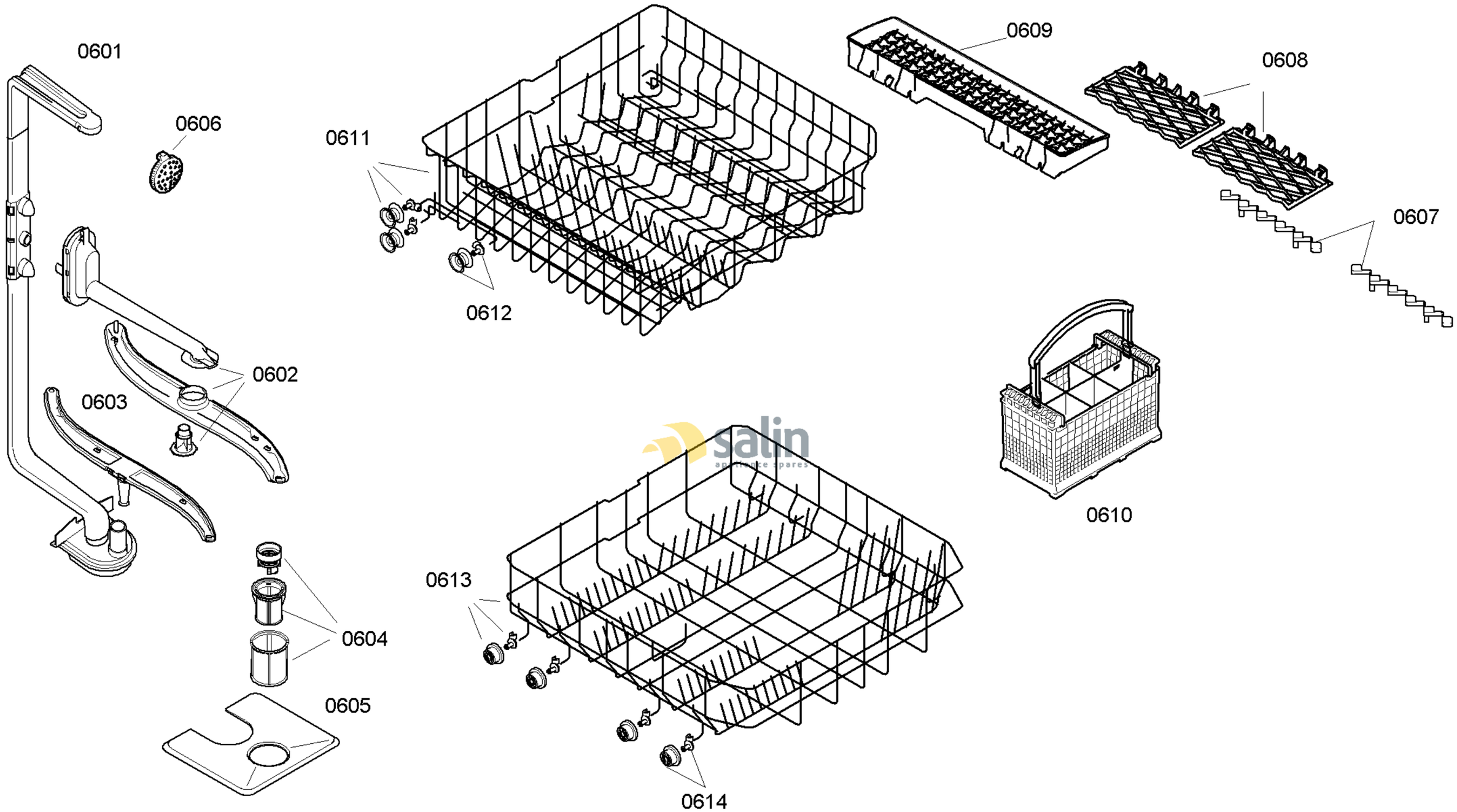

58300000119529 aet 000 b 6/6

FAMILY : SGI55E25EU
MODEL NO: SGI55E25EU/75
Check Position No/Part No or Replacement No