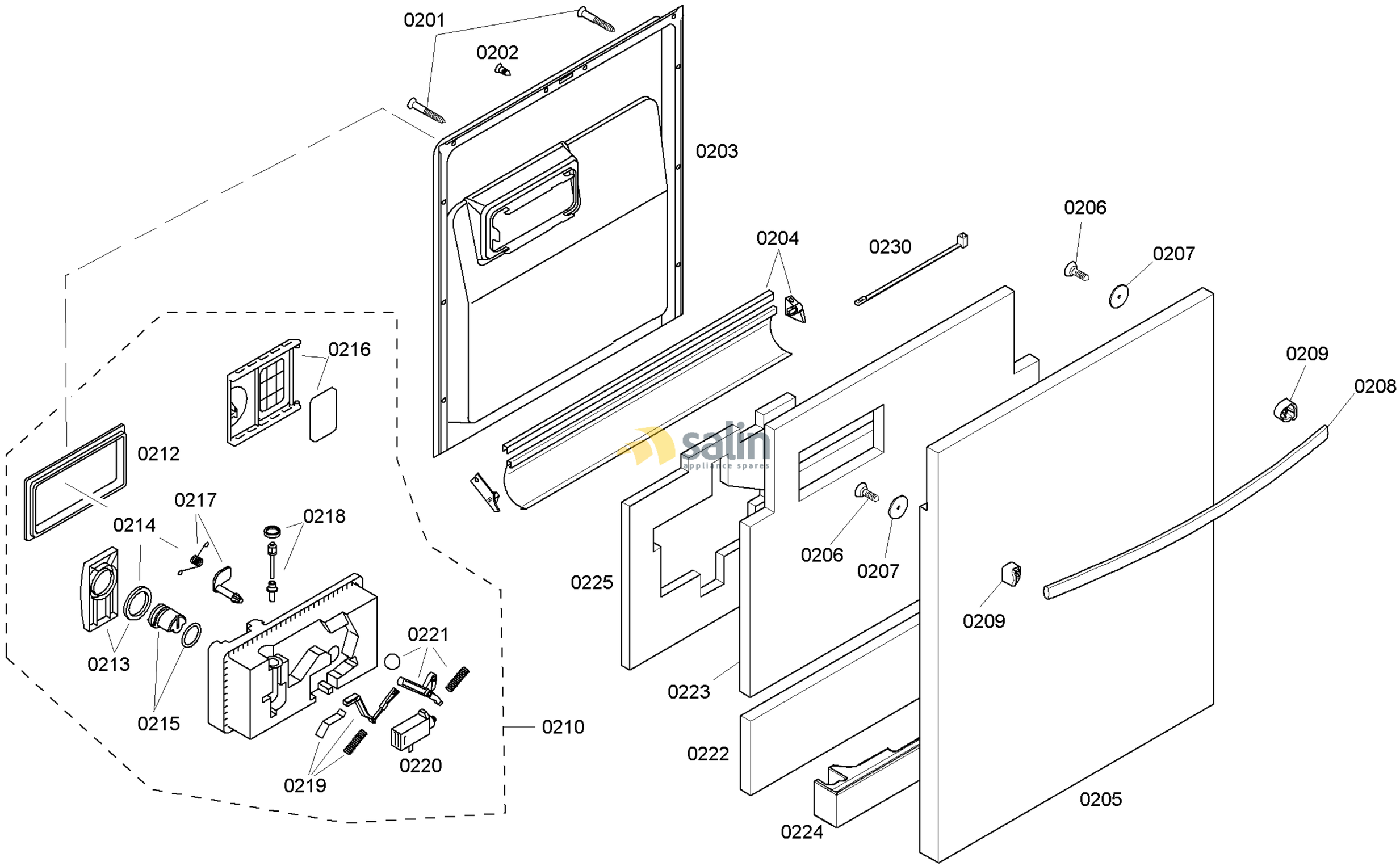

58300000146381 aet 000 e 2/6

FAMILY : SHX65P02UC
MODEL NO: SHX65P02UC/59
Check Position No/Part No or Replacement No

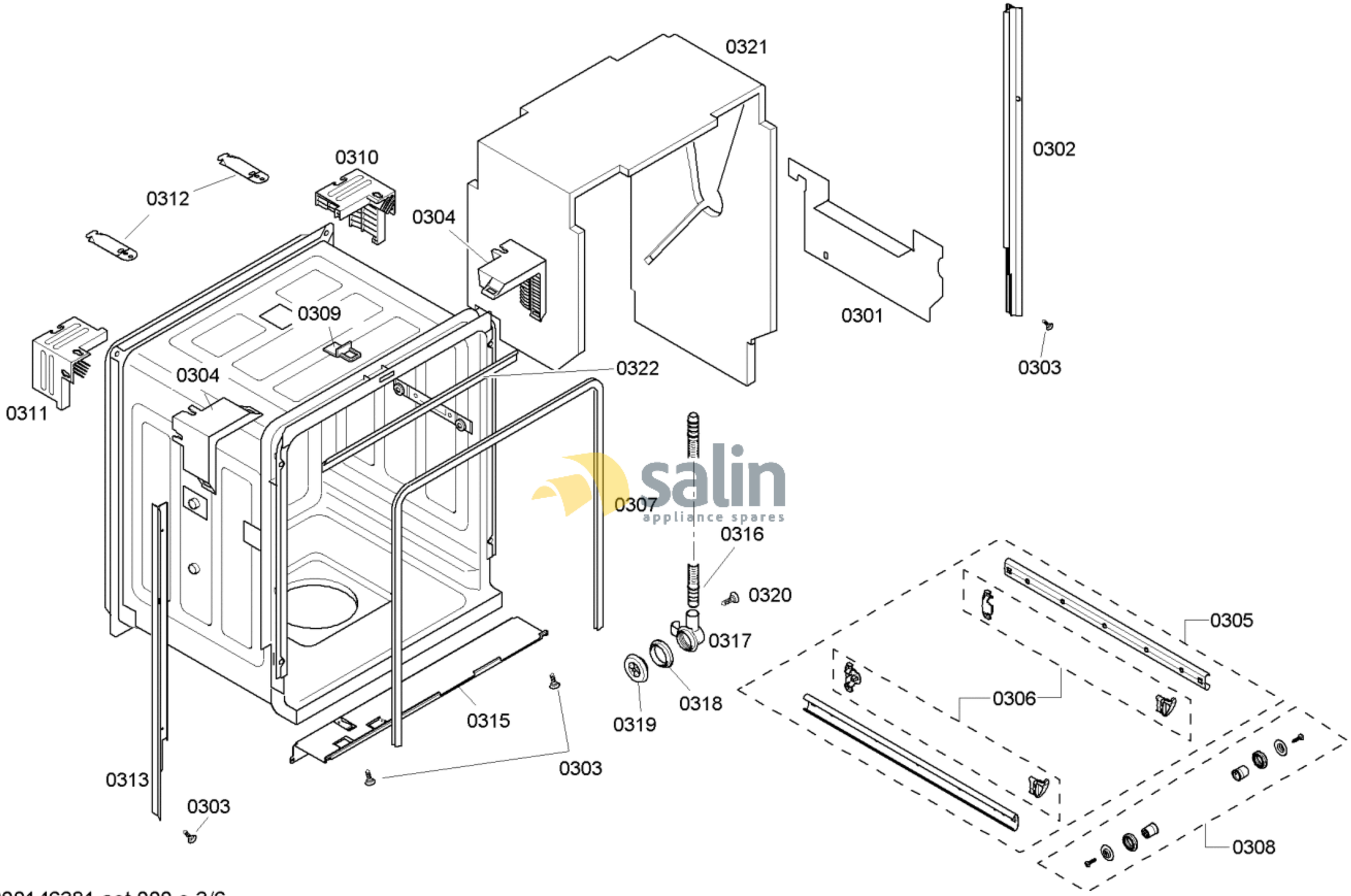

58300000146381 aet 000 e 3/6

FAMILY : SHX65P02UC

MODEL NO: SHX65P02UC/59

Check Position No/Part No or Replacement No

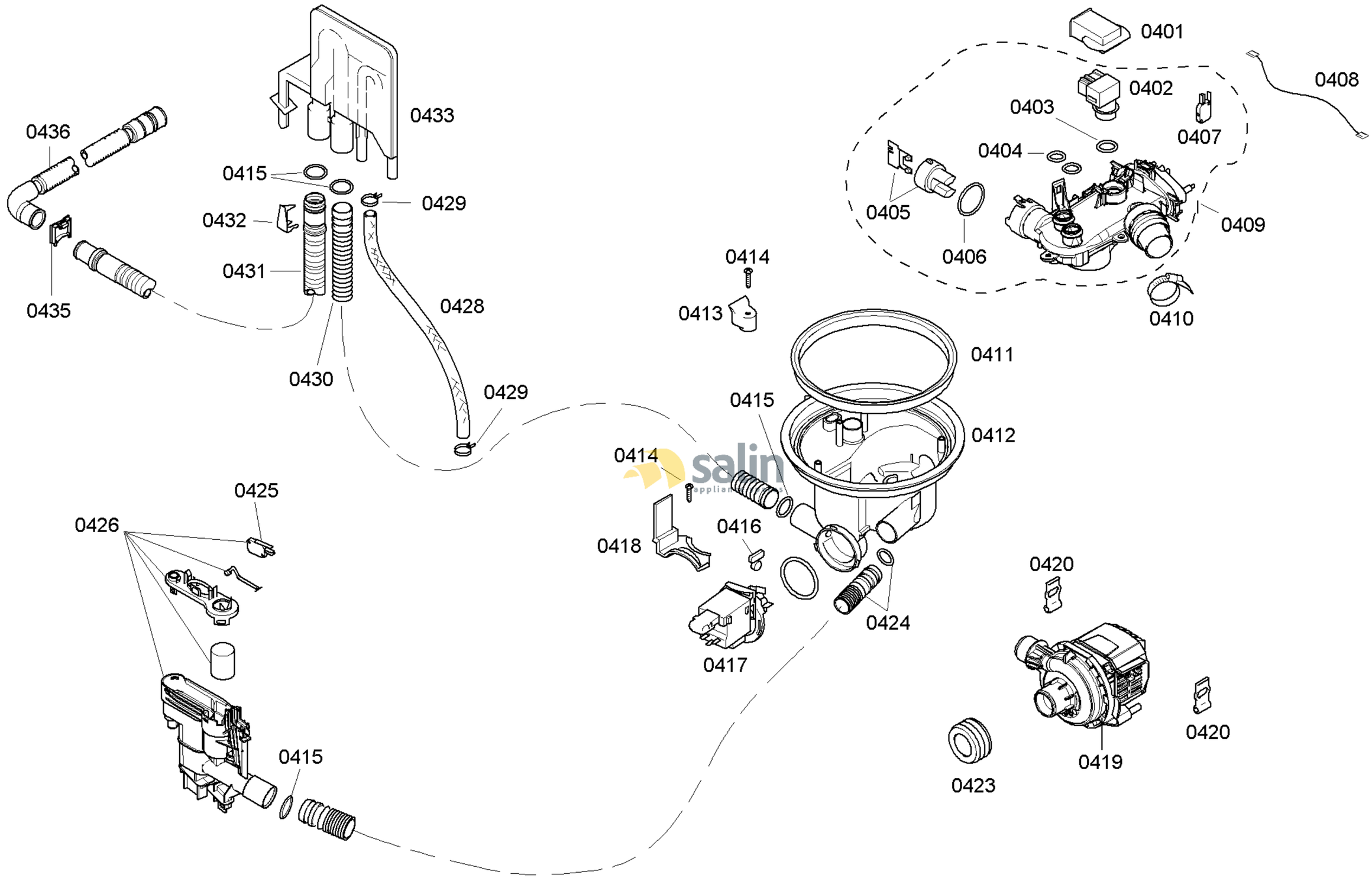

58300000146381 aet 000 e 4/6

FAMILY : SHX65P02UC
MODEL NO: SHX65P02UC/59
Check Position No/Part No or Replacement No

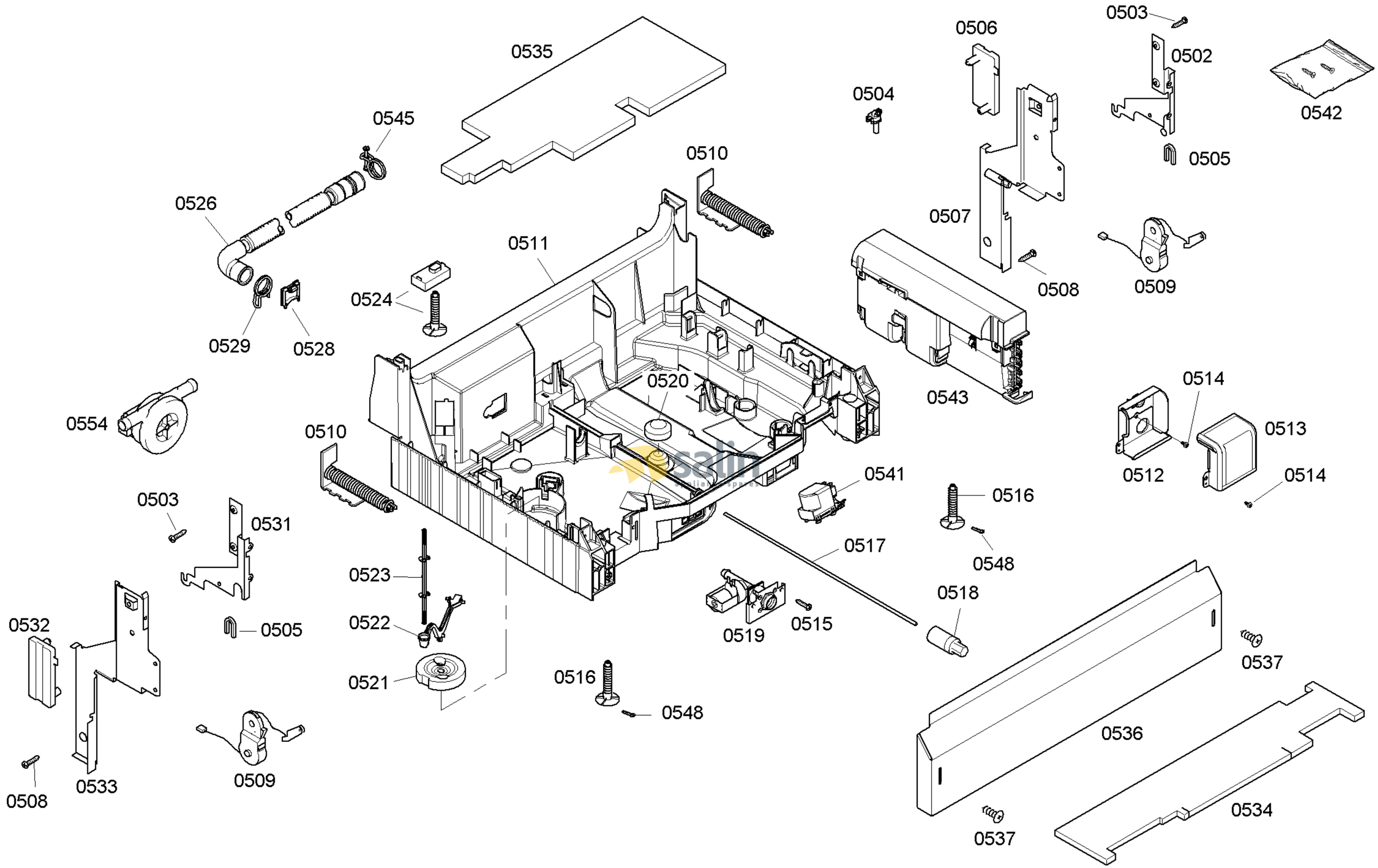

58300000146381 aet 000 e 5/6

FAMILY : SHX65P02UC
MODEL NO: SHX65P02UC/59
Check Position No/Part No or Replacement No

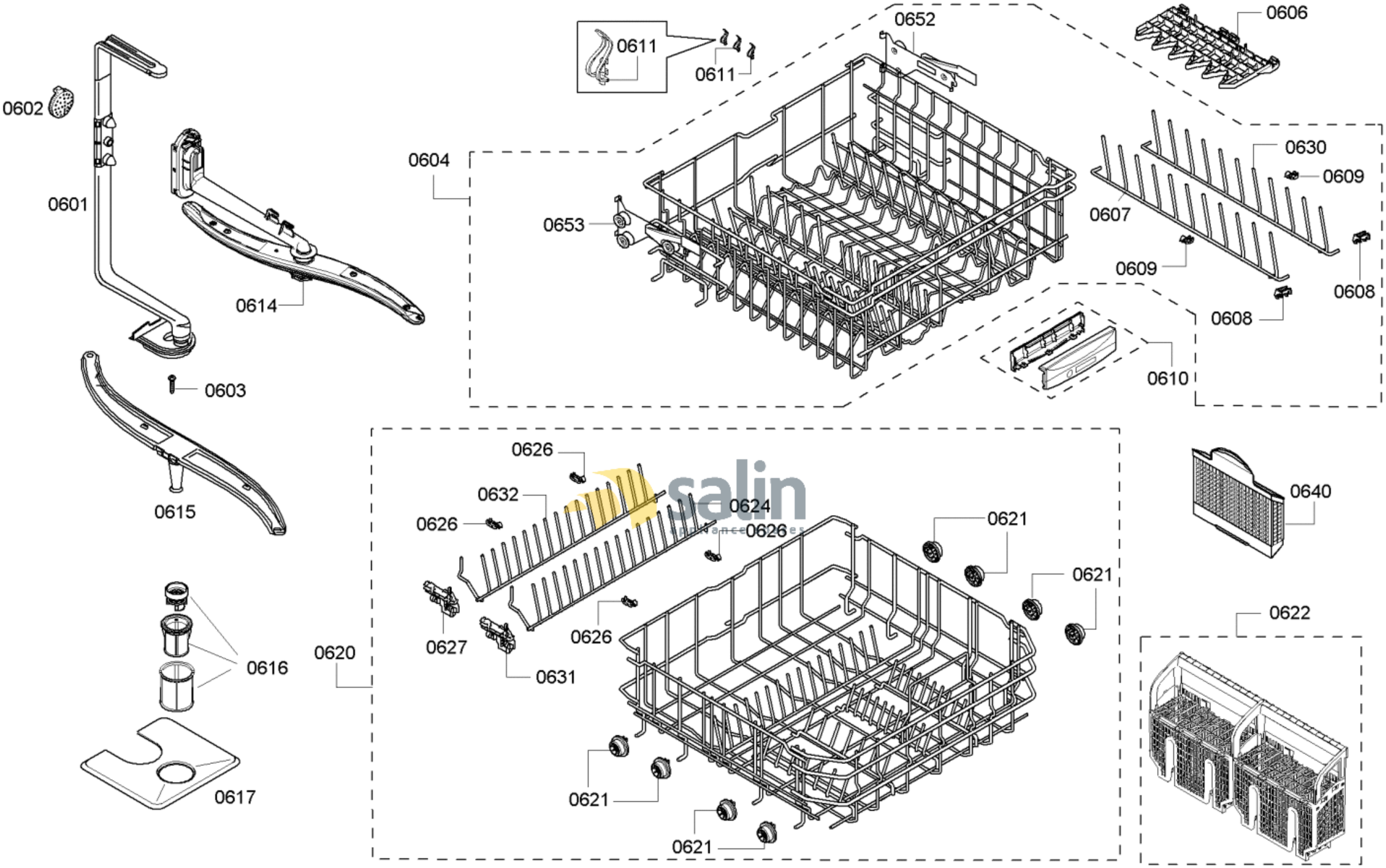

58300000146381 aet 000 e 6/6

FAMILY : SHX65P02UC

MODEL NO: SHX65P02UC/59

Check Position No/Part No or Replacement No