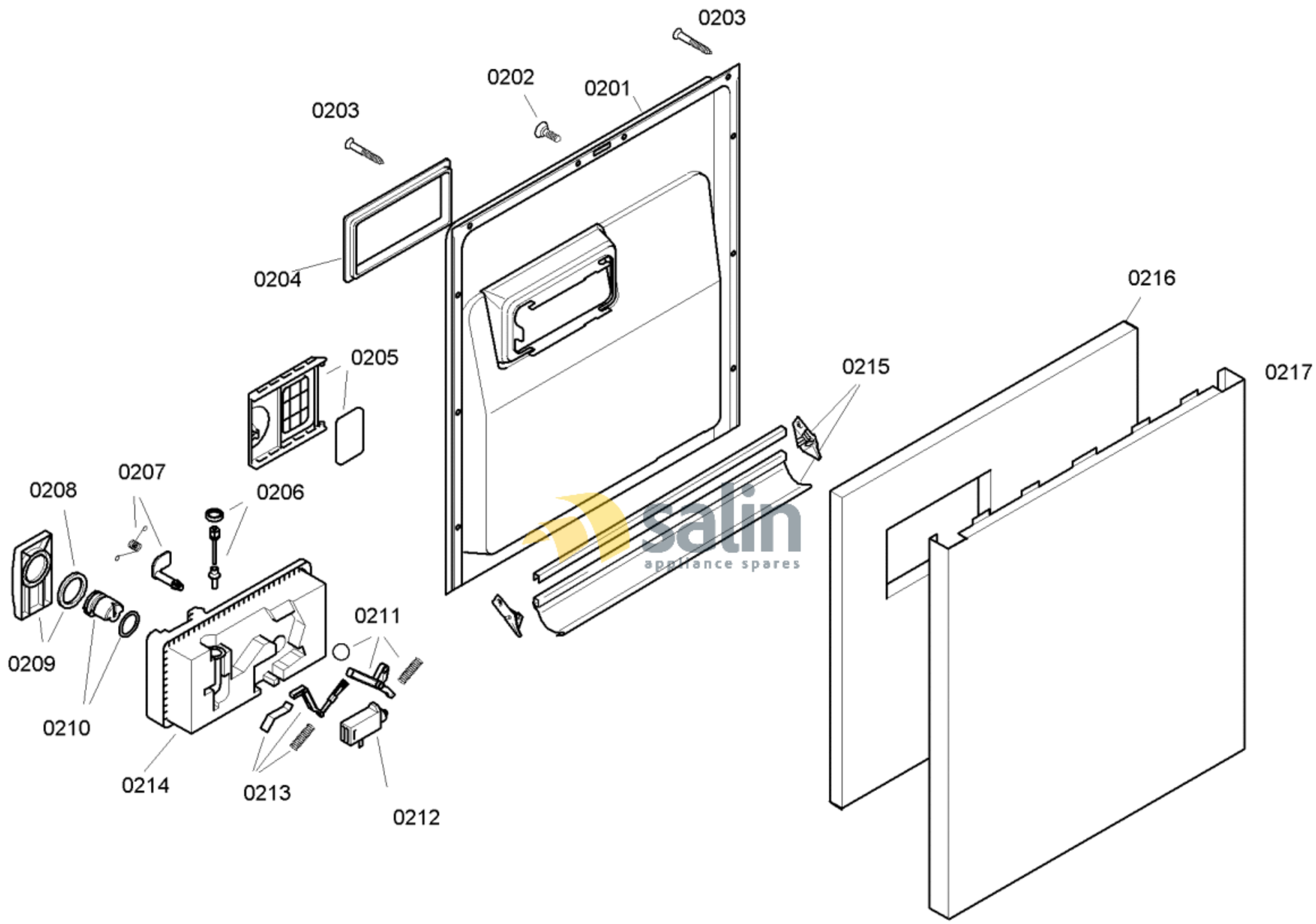

58300000120119 aet 000 b 2/6

FAMILY : SGS55E08BS

MODEL NO: SGS55E08BS/82

Check Position No/Part No or Replacement No

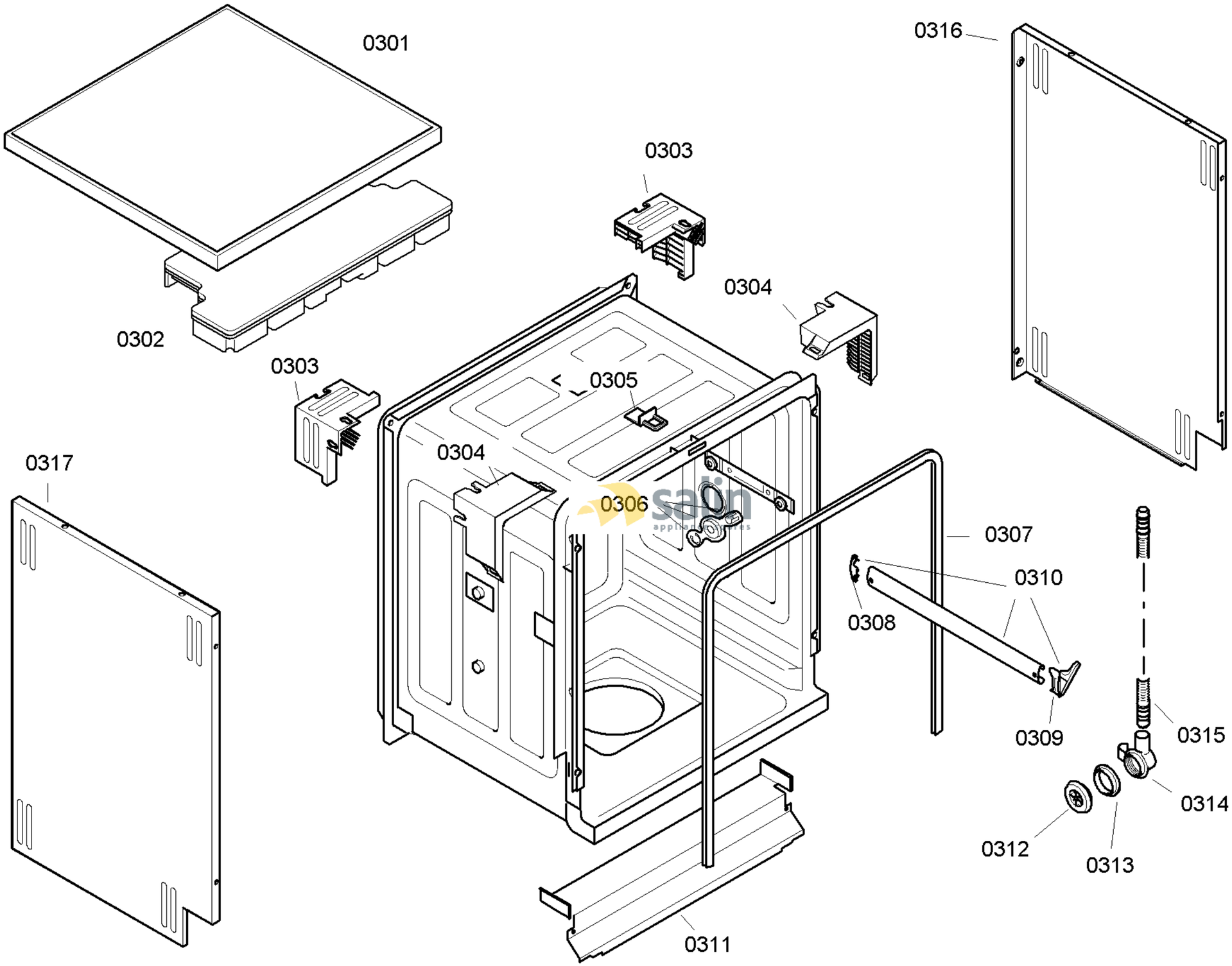

58300000120119 aet 000 b 3/6

FAMILY : SGS55E08BS
MODEL NO: SGS55E08BS/82
Check Position No/Part No or Replacement No

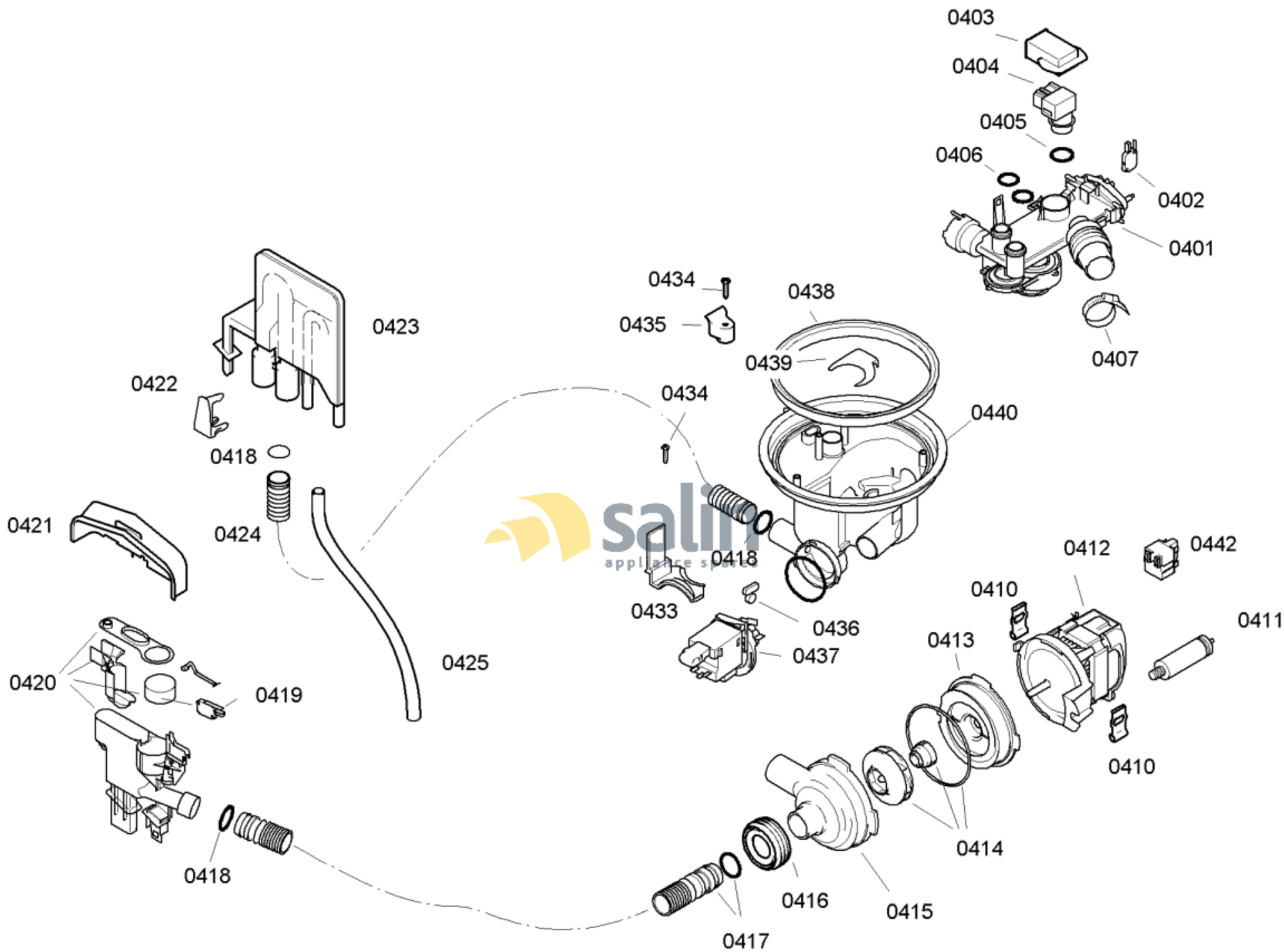

58300000120119 aet 000 b 4/6

FAMILY : SGS55E08BS

MODEL NO: SGS55E08BS/82

Check Position No/Part No or Replacement No

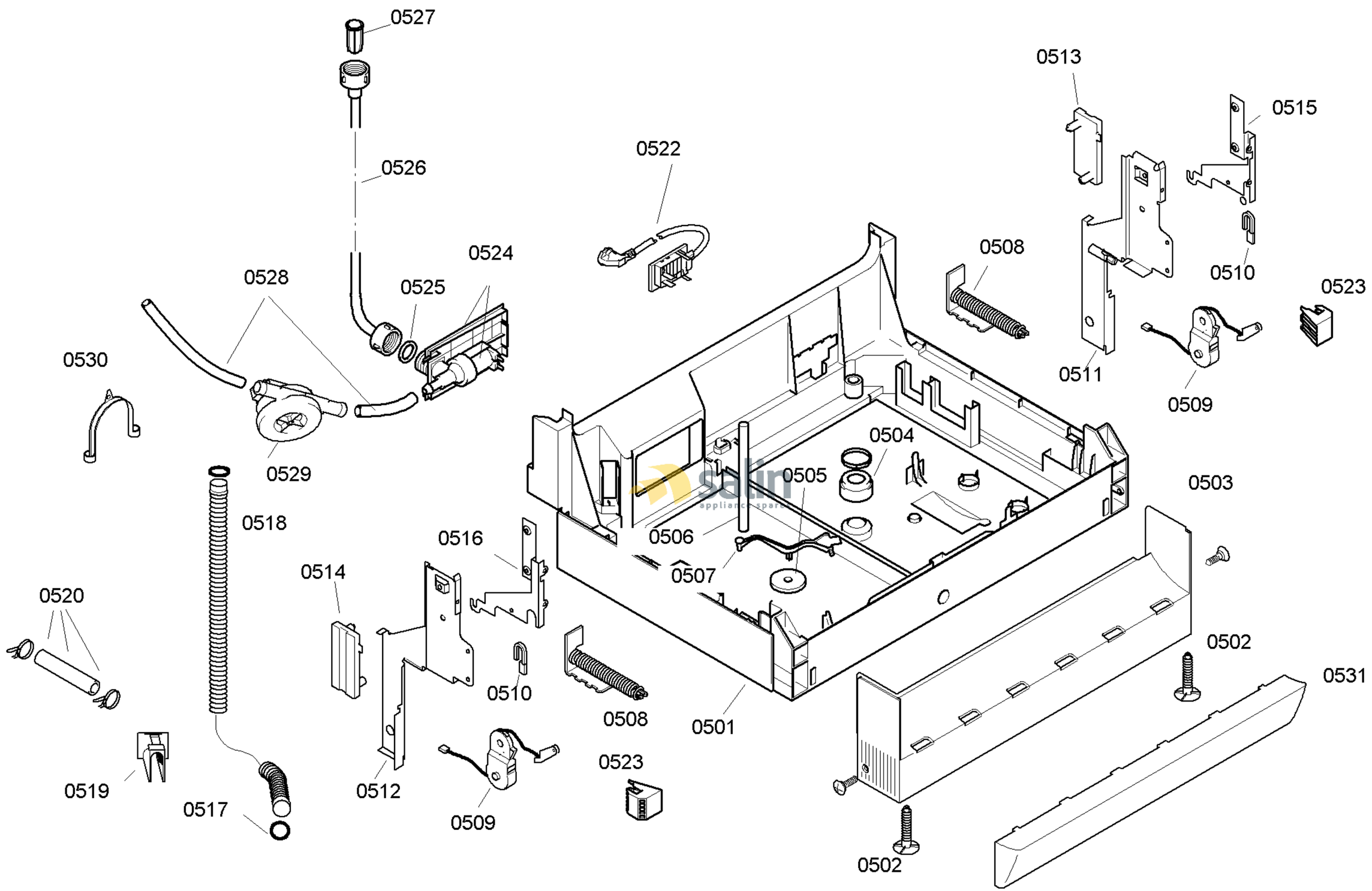

58300000120119 aet 000 b 5/6

FAMILY : SGS55E08BS
MODEL NO: SGS55E08BS/82
Check Position No/Part No or Replacement No

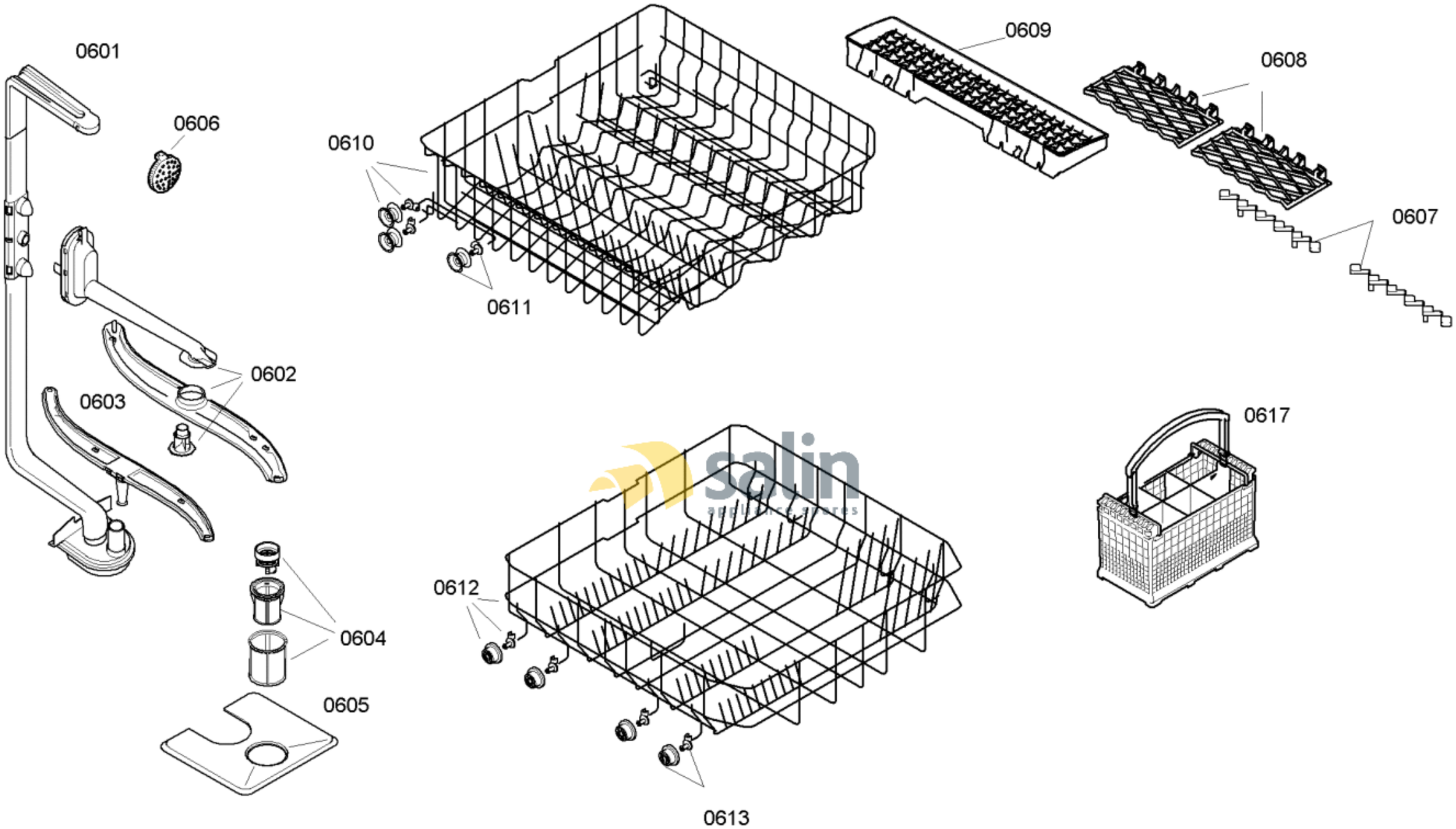

58300000120119 aet 000 b 6/6

FAMILY : SGS55E08BS

MODEL NO: SGS55E08BS/82

Check Position No/Part No or Replacement No