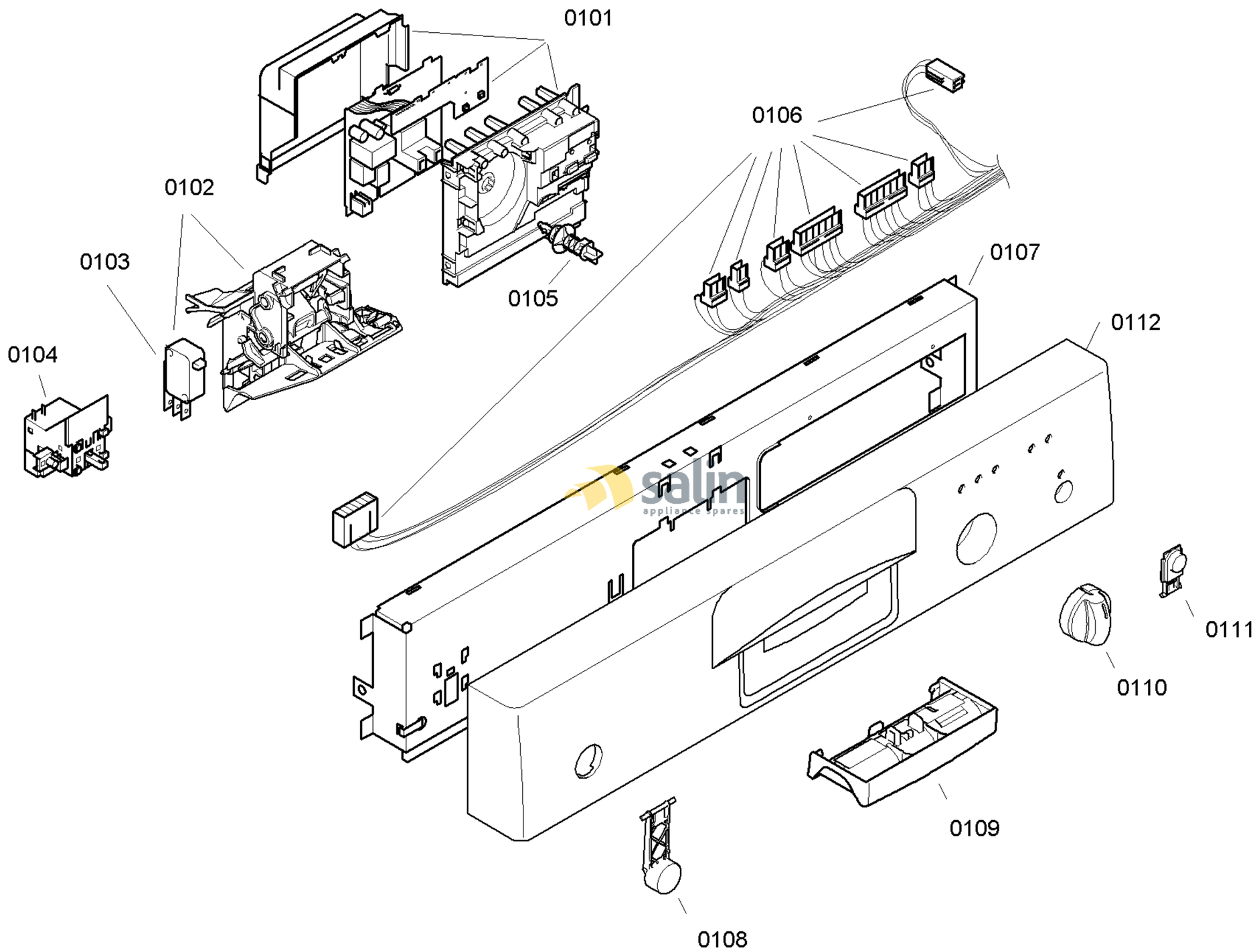

58300000116249 aet 000 b 1/6

FAMILY : SGS53E82EU
MODEL NO: SGS53E82EU/74
Check Position No/Part No or Replacement No

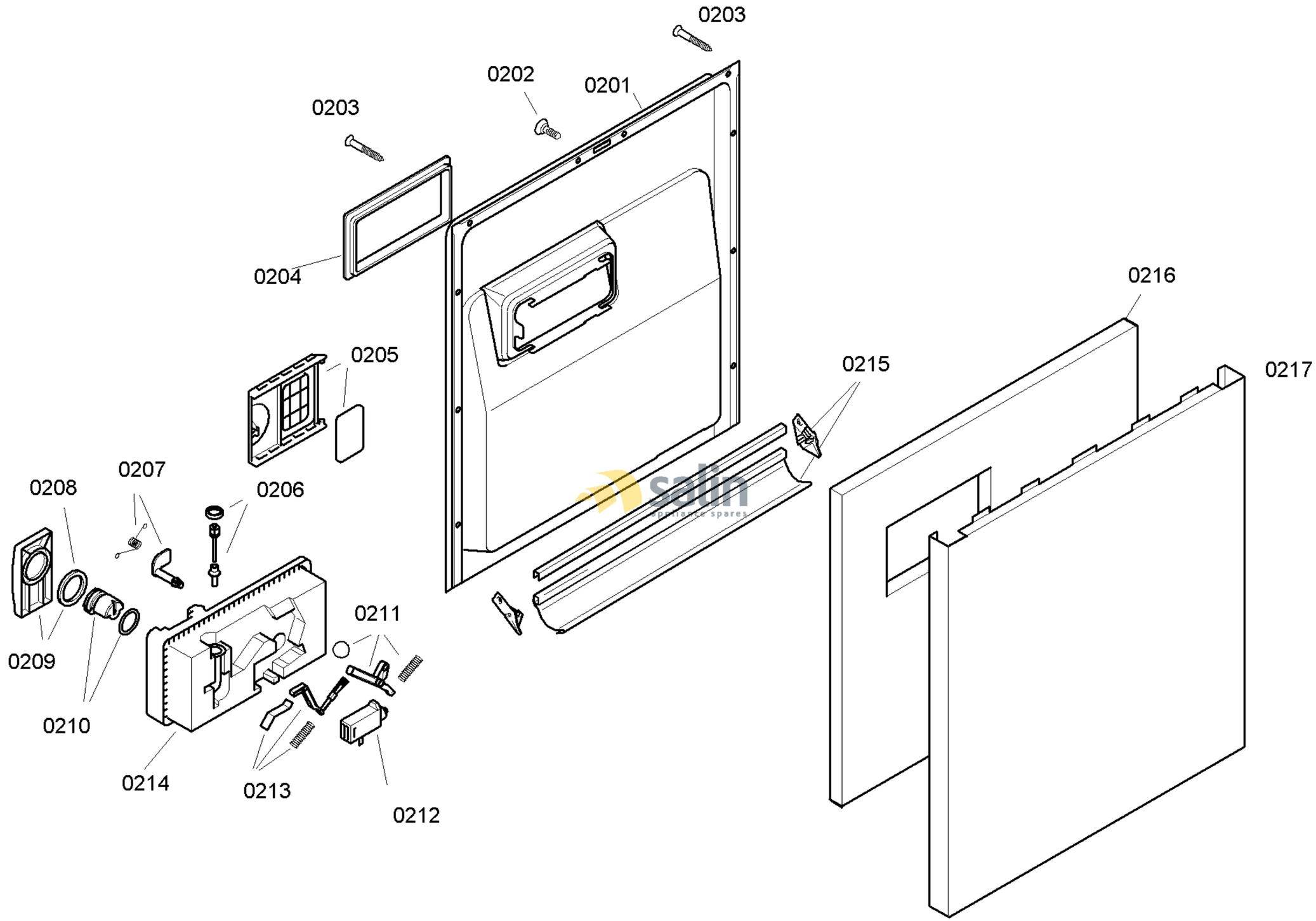

58300000116249 aet 000 b 2/6

FAMILY : SGS53E82EU
MODEL NO: SGS53E82EU/74
Check Position No/Part No or Replacement No

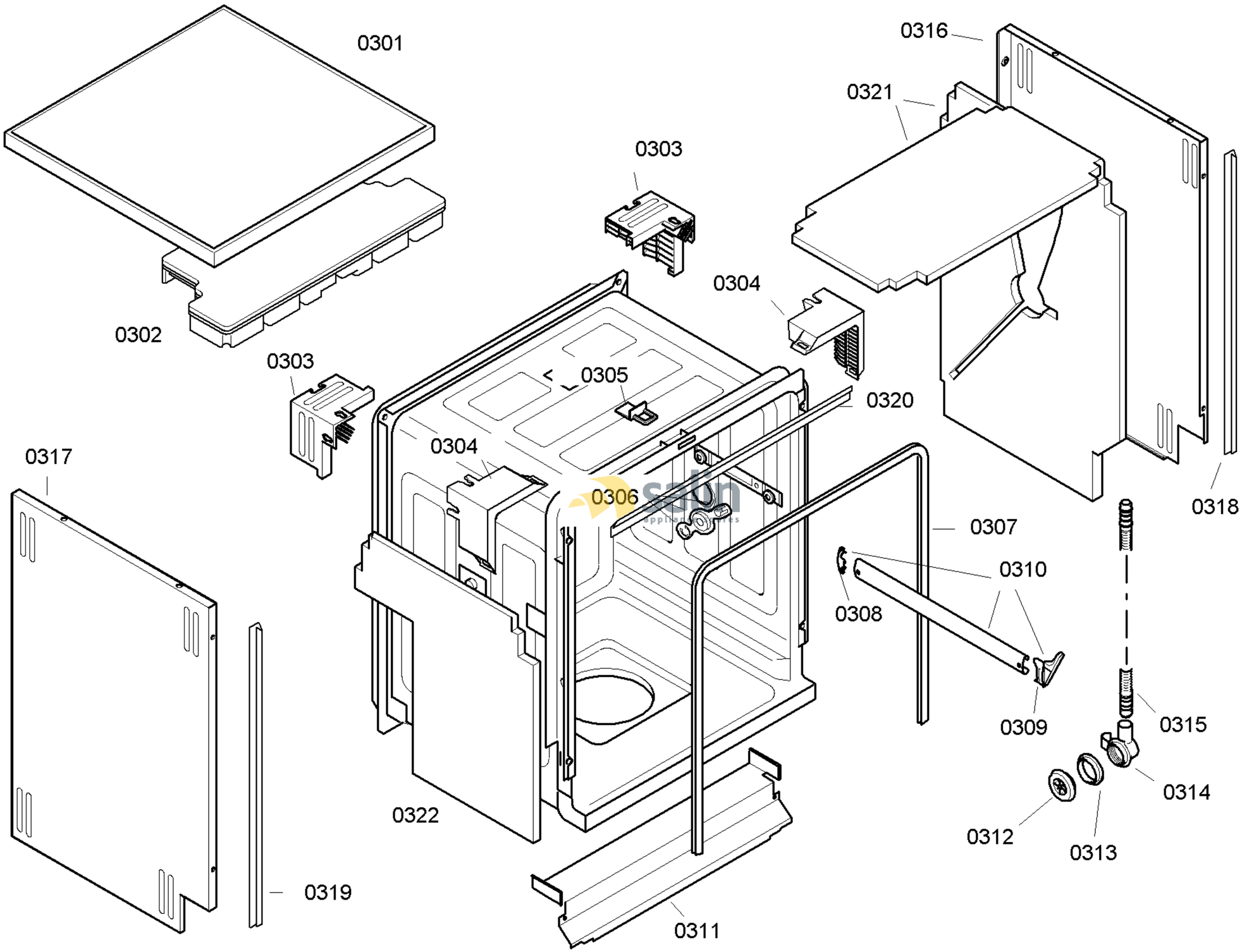

58300000116249 aet 000 b 3/6

FAMILY : SGS53E82EU
MODEL NO: SGS53E82EU/74
Check Position No/Part No or Replacement No

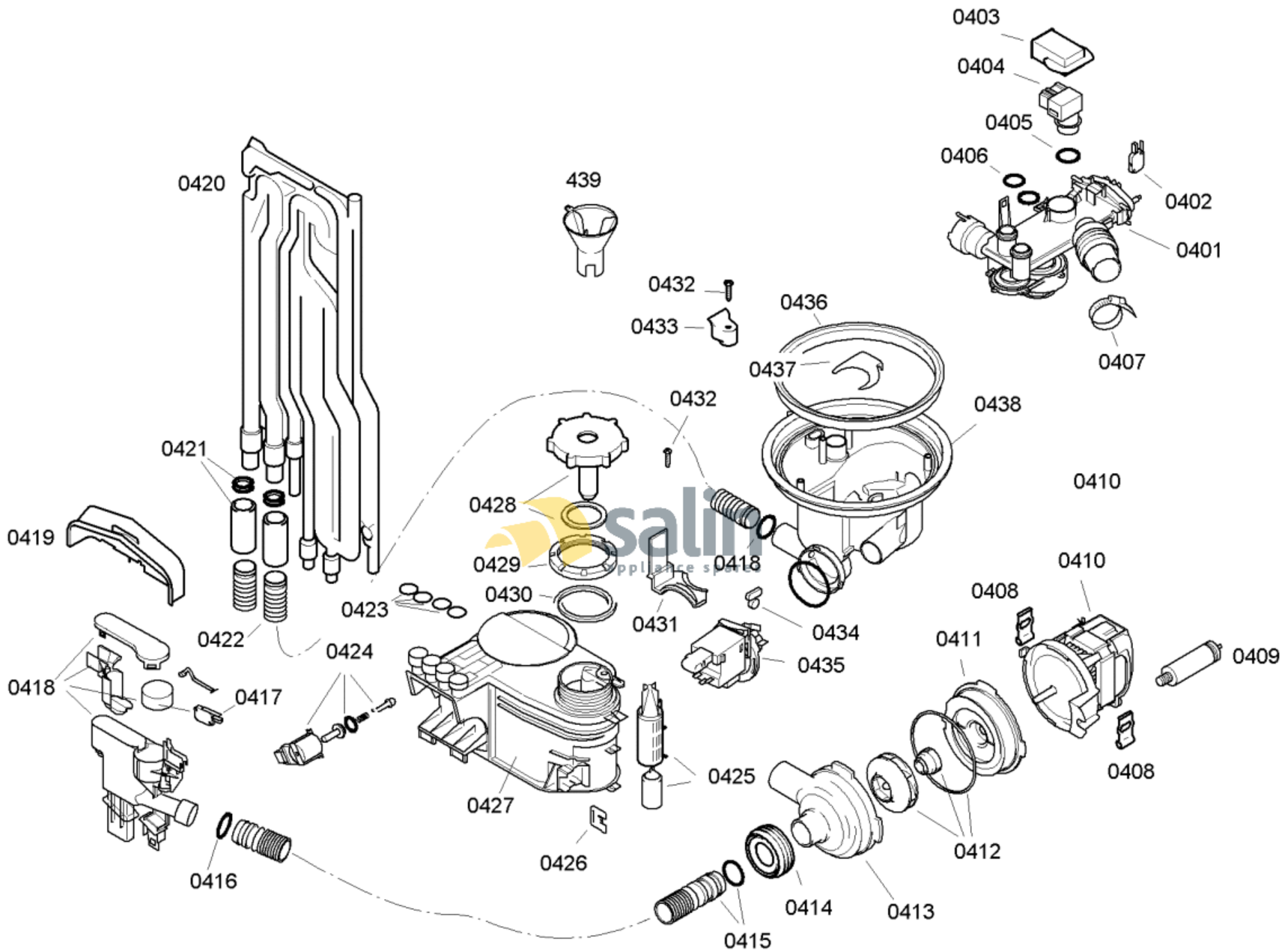

58300000116249 aet 000 b 4/6

FAMILY : SGS53E82EU

MODEL NO: SGS53E82EU/74

Check Position No/Part No or Replacement No

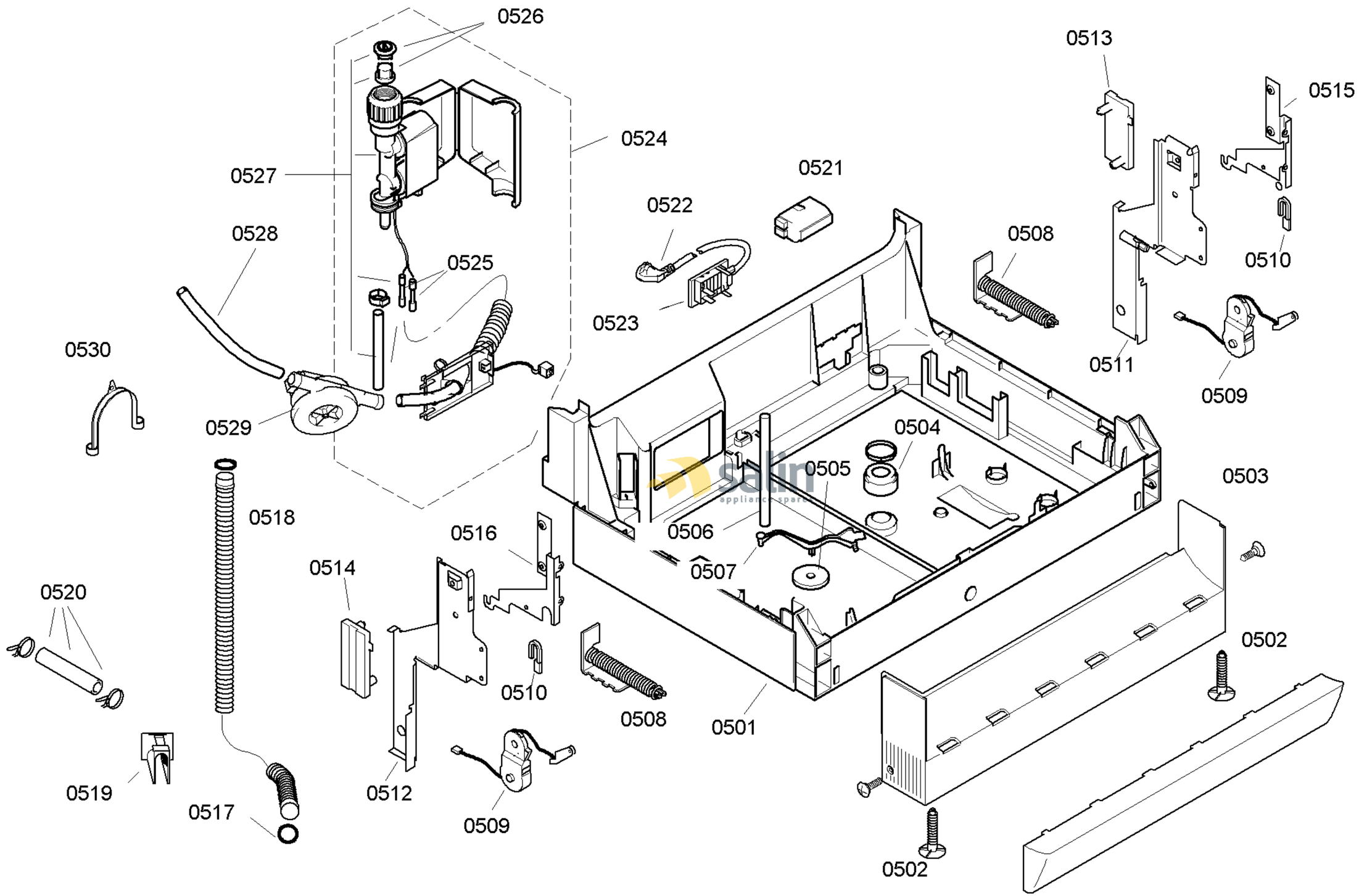

58300000116249 aet 000 b 5/6

FAMILY : SGS53E82EU
MODEL NO: SGS53E82EU/74
Check Position No/Part No or Replacement No

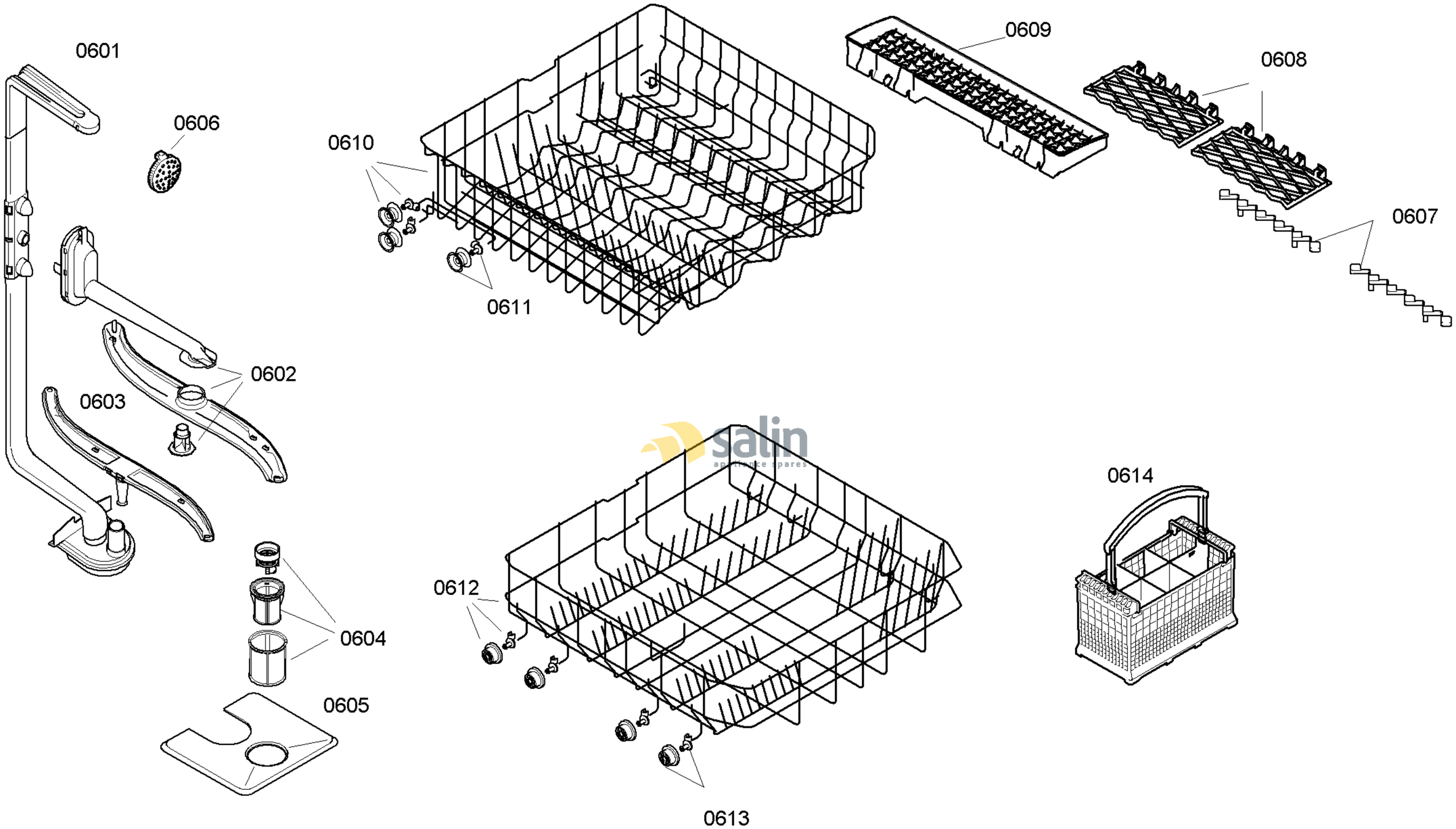

58300000116249 aet 000 b 6/6

FAMILY : SGS53E82EU
MODEL NO: SGS53E82EU/74
Check Position No/Part No or Replacement No