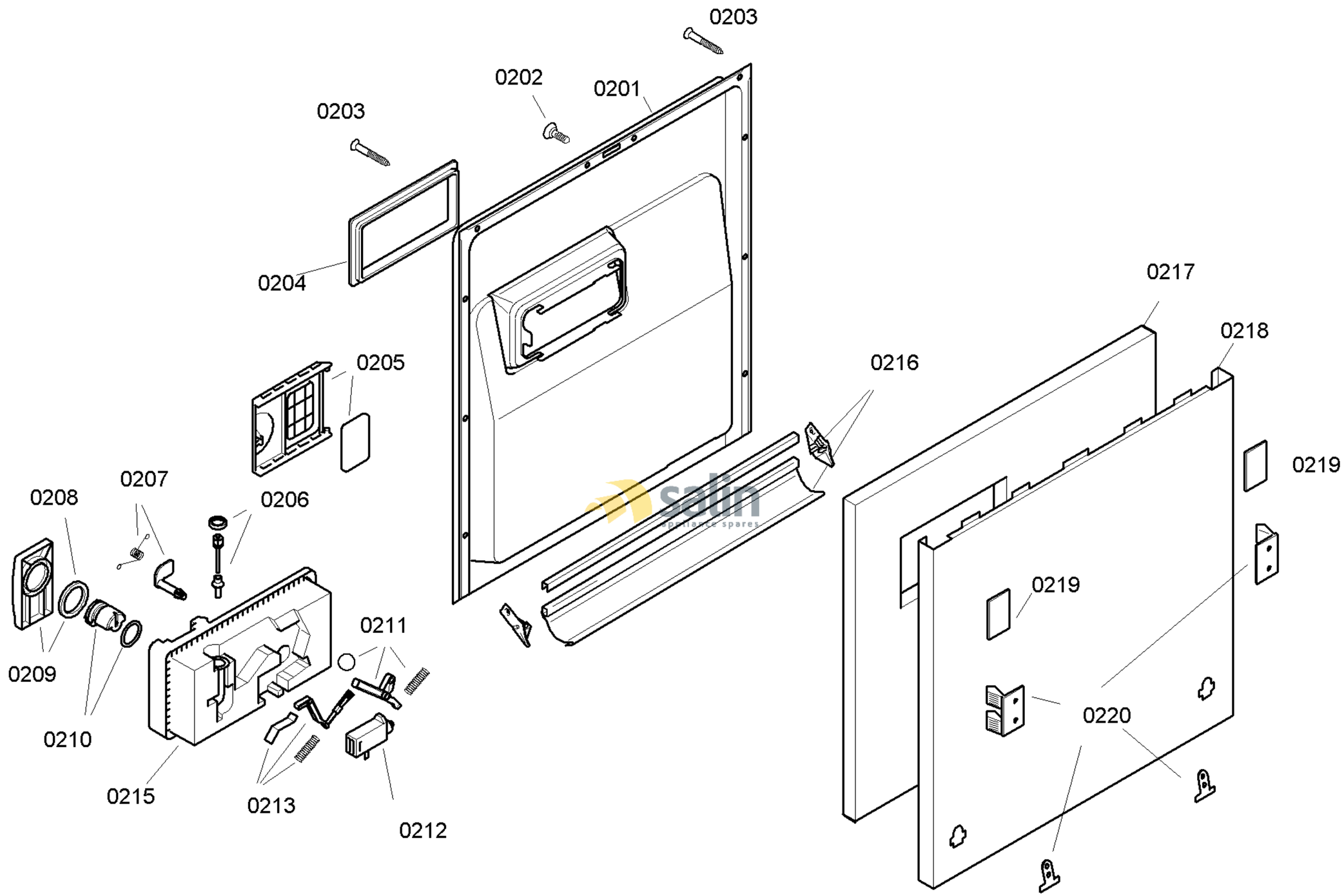

58300000136875 aet 000 a 2/6

FAMILY : SGI55E05EP
MODEL NO: SGI55E05EP/93
Check Position No/Part No or Replacement No

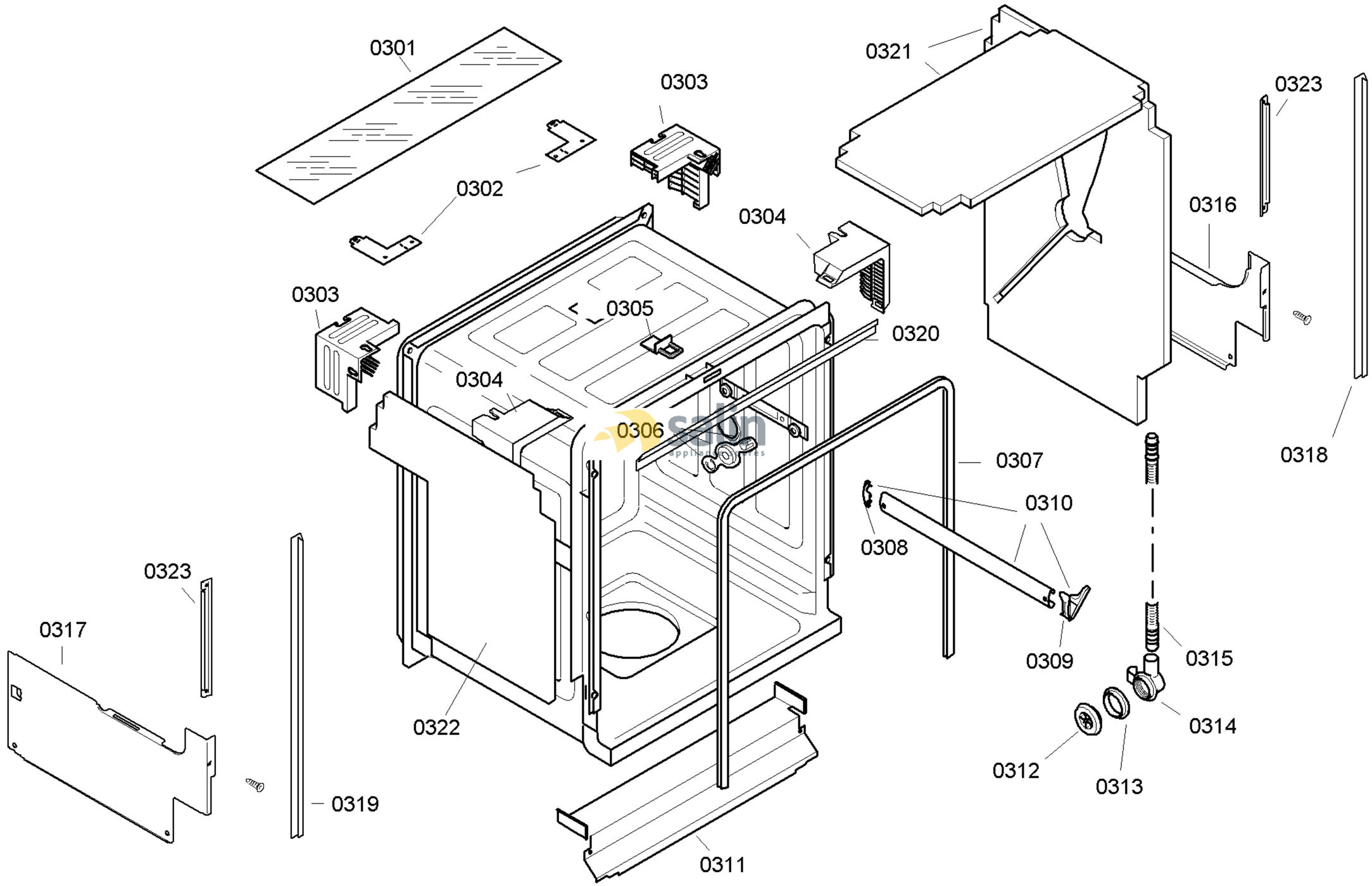

58300000136875 aet 000 a 3/6

FAMILY : SGI55E05EP
MODEL NO: SGI55E05EP/93
Check Position No/Part No or Replacement No

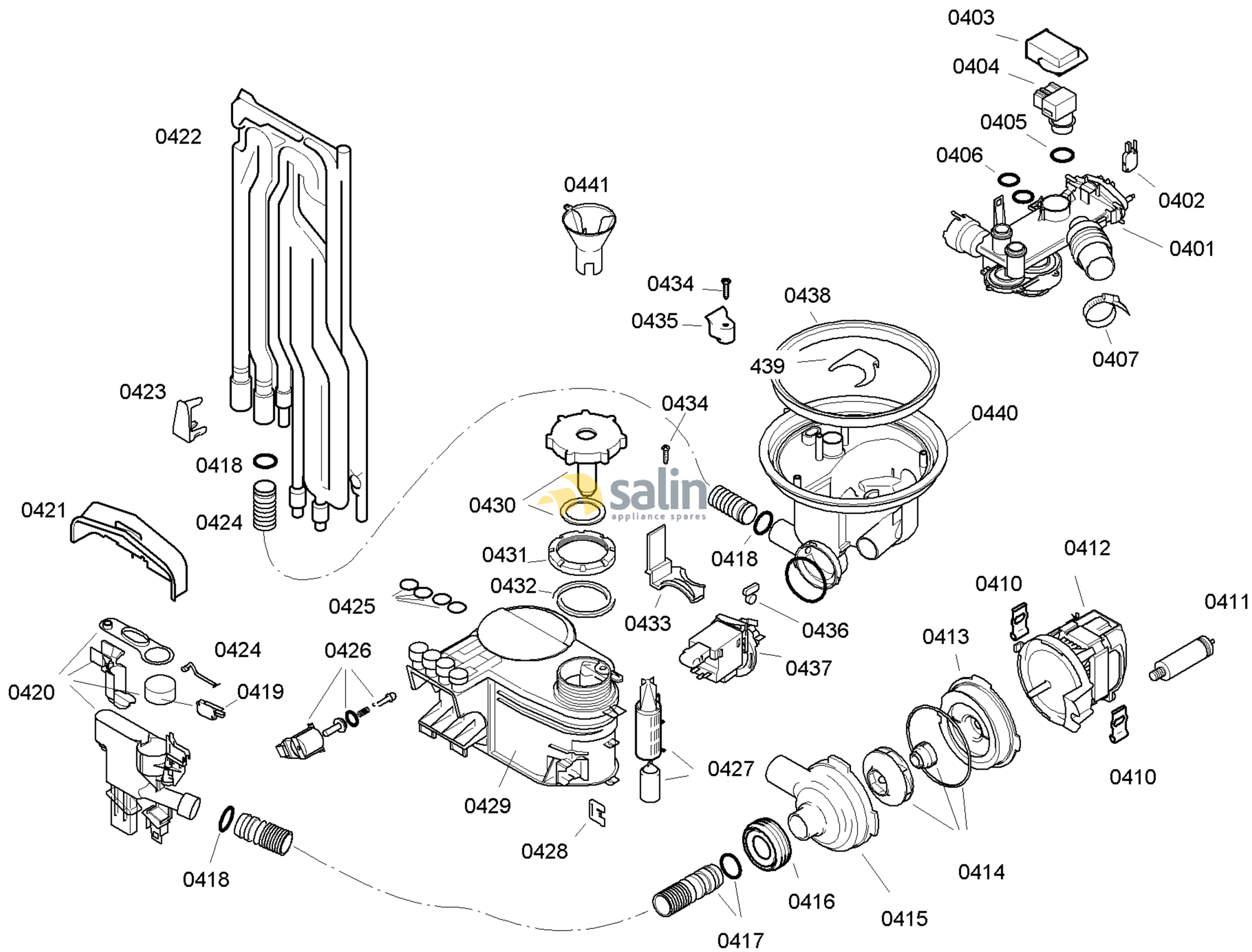

58300000136875 aet 000 a 4/6

FAMILY : SGI55E05EP
MODEL NO: SGI55E05EP/93
Check Position No/Part No or Replacement No

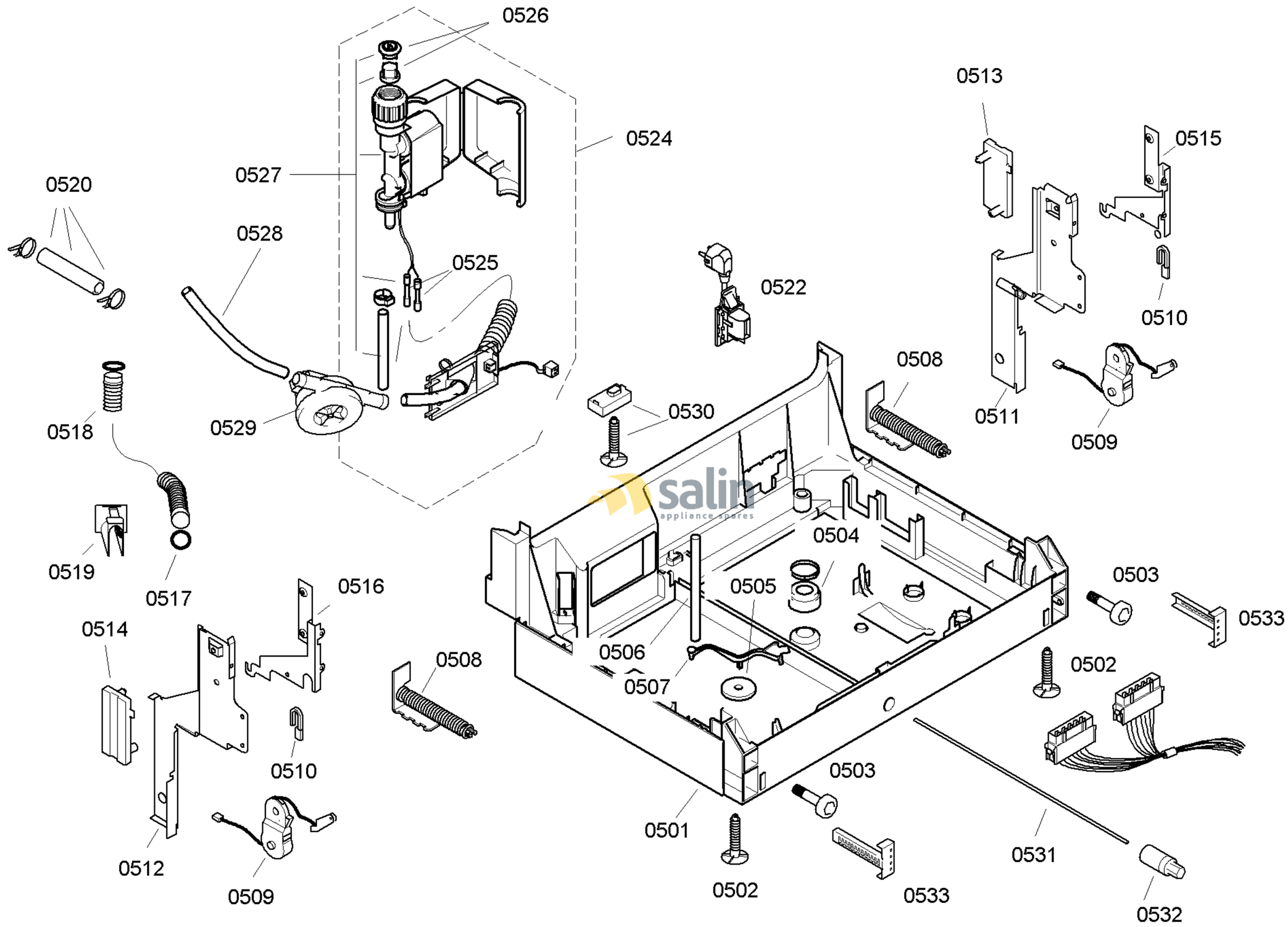

58300000136875 aet 000 a 5/6

FAMILY : SGI55E05EP
MODEL NO: SGI55E05EP/93
Check Position No/Part No or Replacement No

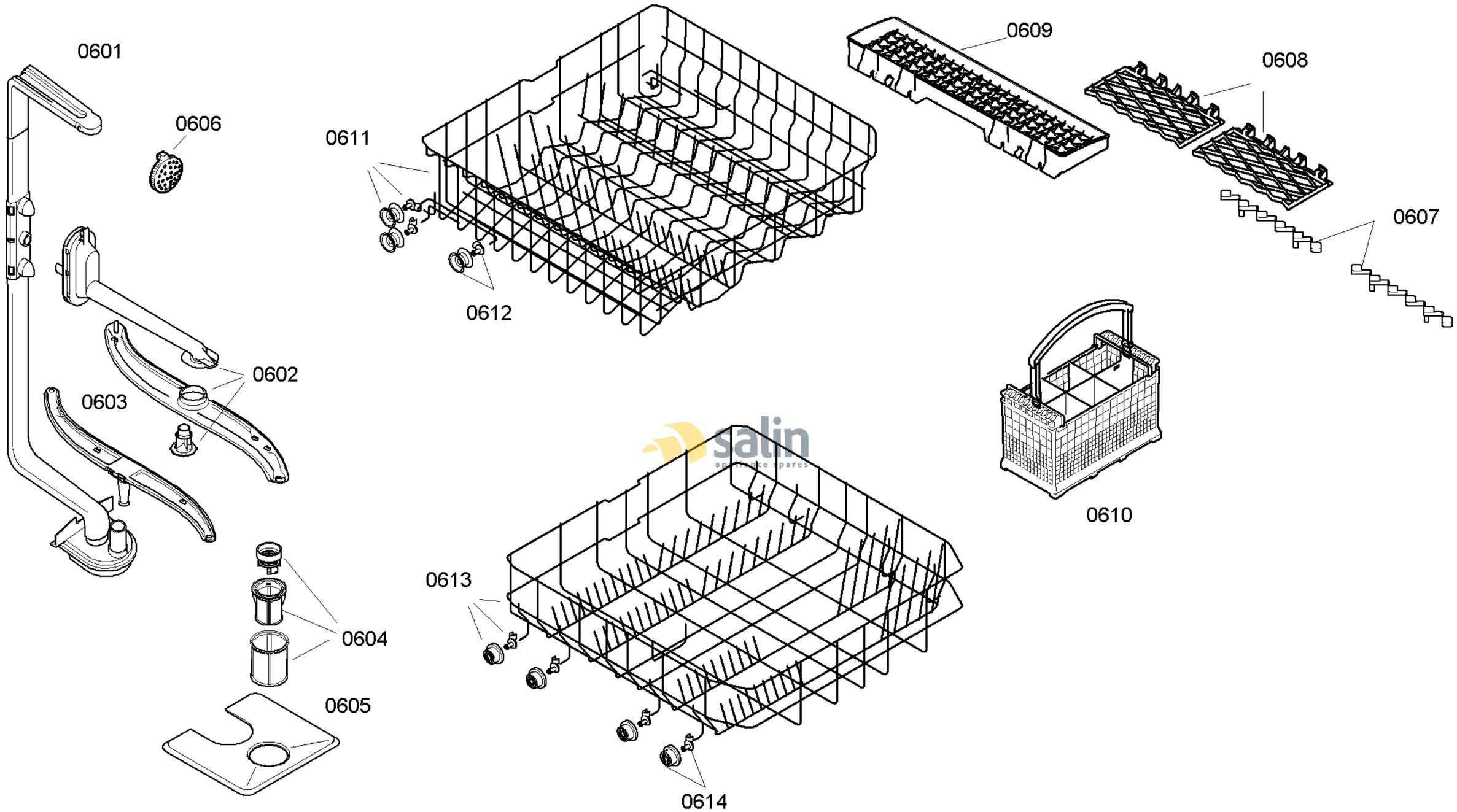

58300000136875 aet 000 a 6/6

FAMILY : SGI55E05EP
MODEL NO: SGI55E05EP/93
Check Position No/Part No or Replacement No