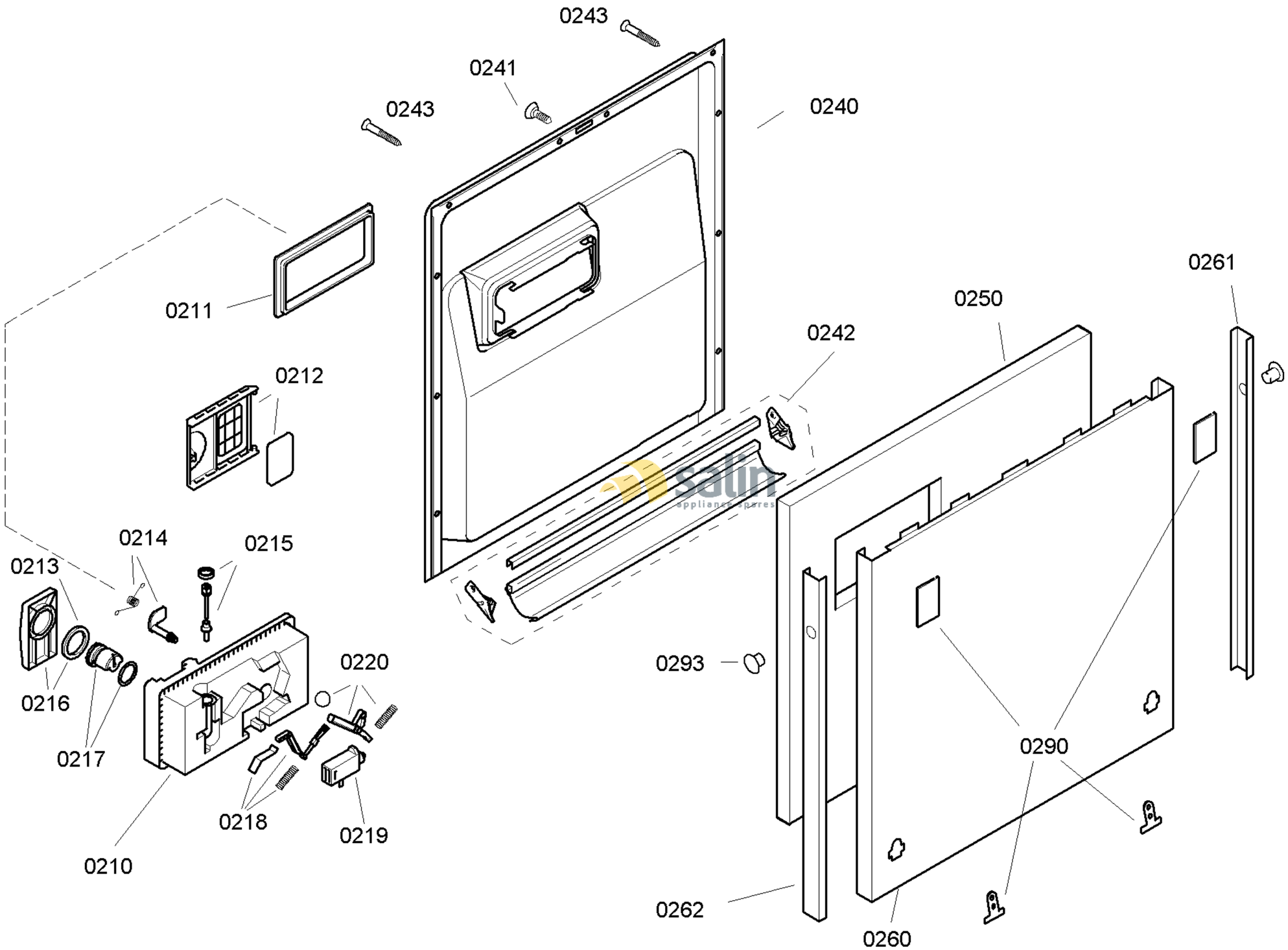

58300000114269 aet 000 b 2/6

FAMILY : SHV43A33EU
MODEL NO: SHV43A33EU/70
Check Position No/Part No or Replacement No

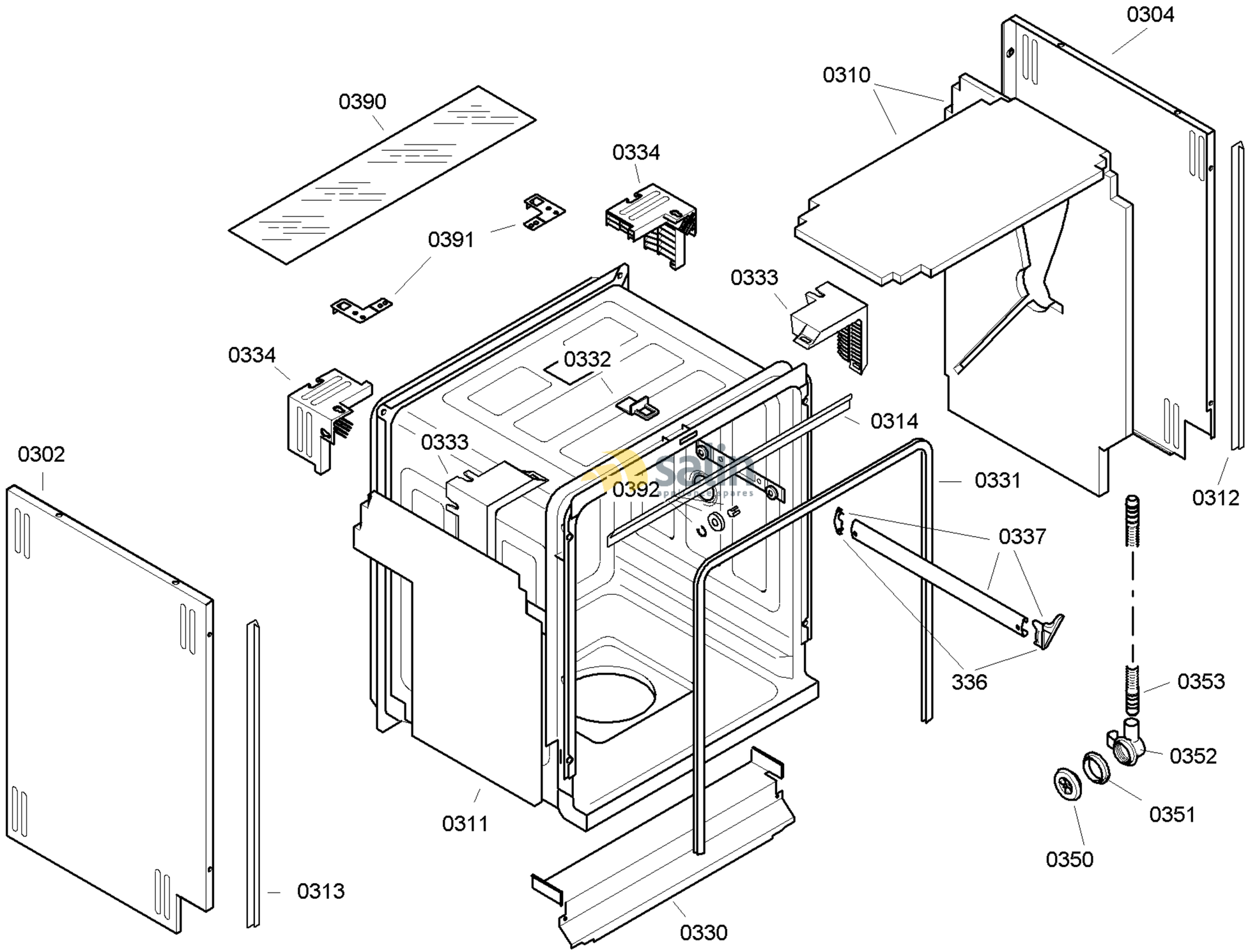

58300000114269 aet 000 b 3/6

FAMILY : SHV43A33EU
MODEL NO: SHV43A33EU/70
Check Position No/Part No or Replacement No

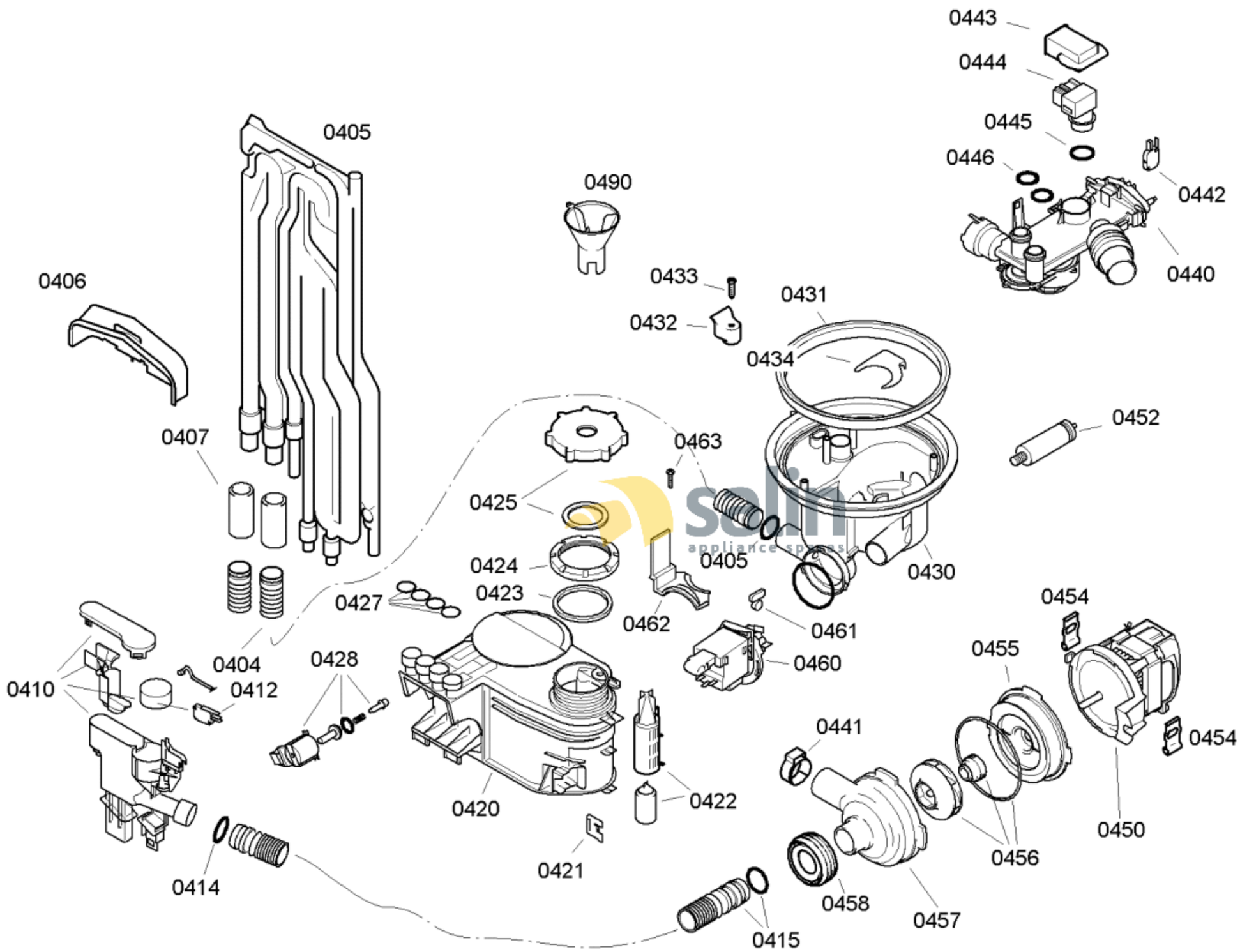

58300000114269 aet 000 b 4/6

FAMILY : SHV43A33EU

MODEL NO: SHV43A33EU/70

Check Position No/Part No or Replacement No

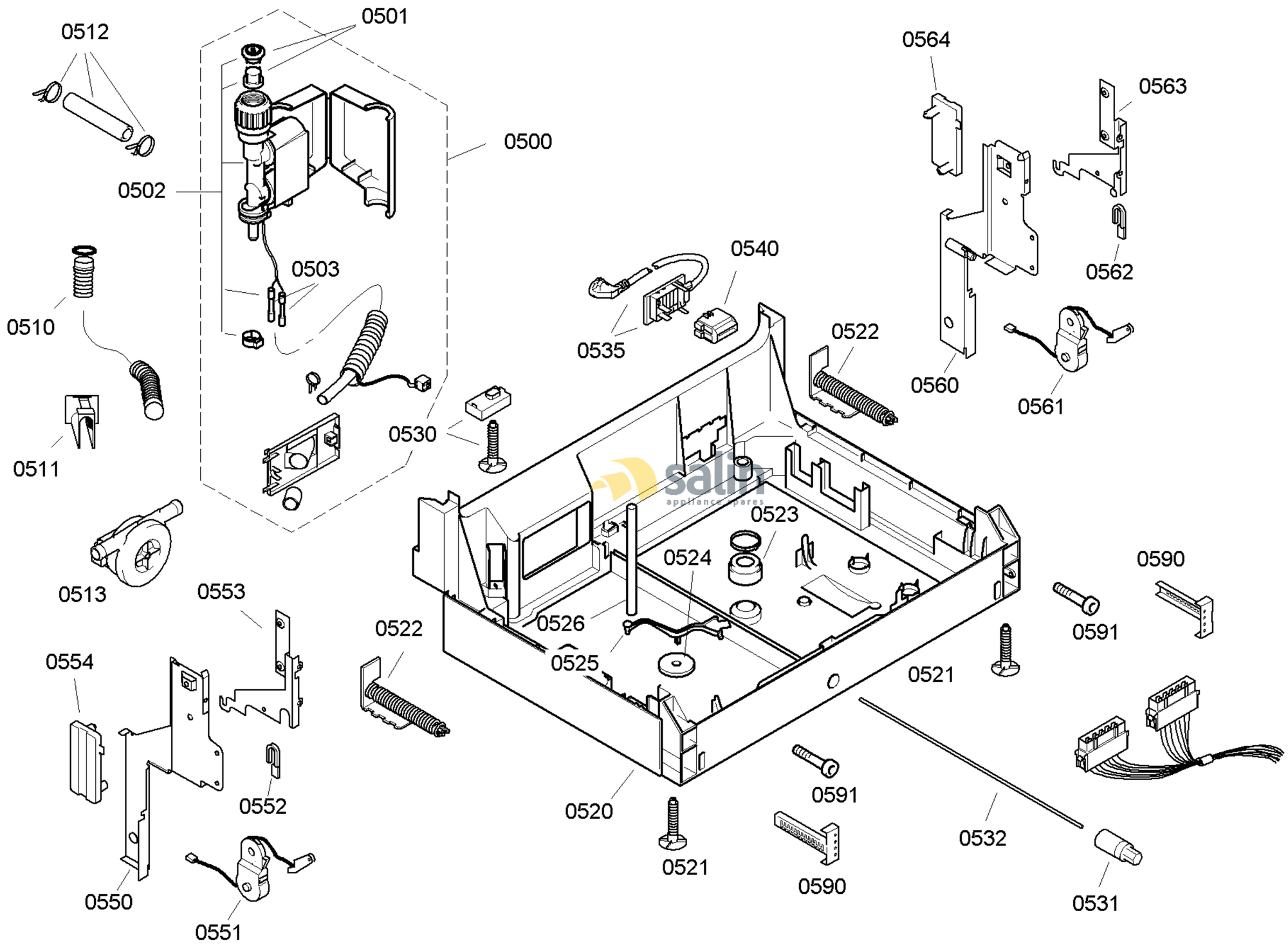

58300000114269 aet 000 b 5/6

FAMILY : SHV43A33EU
MODEL NO: SHV43A33EU/70
Check Position No/Part No or Replacement No

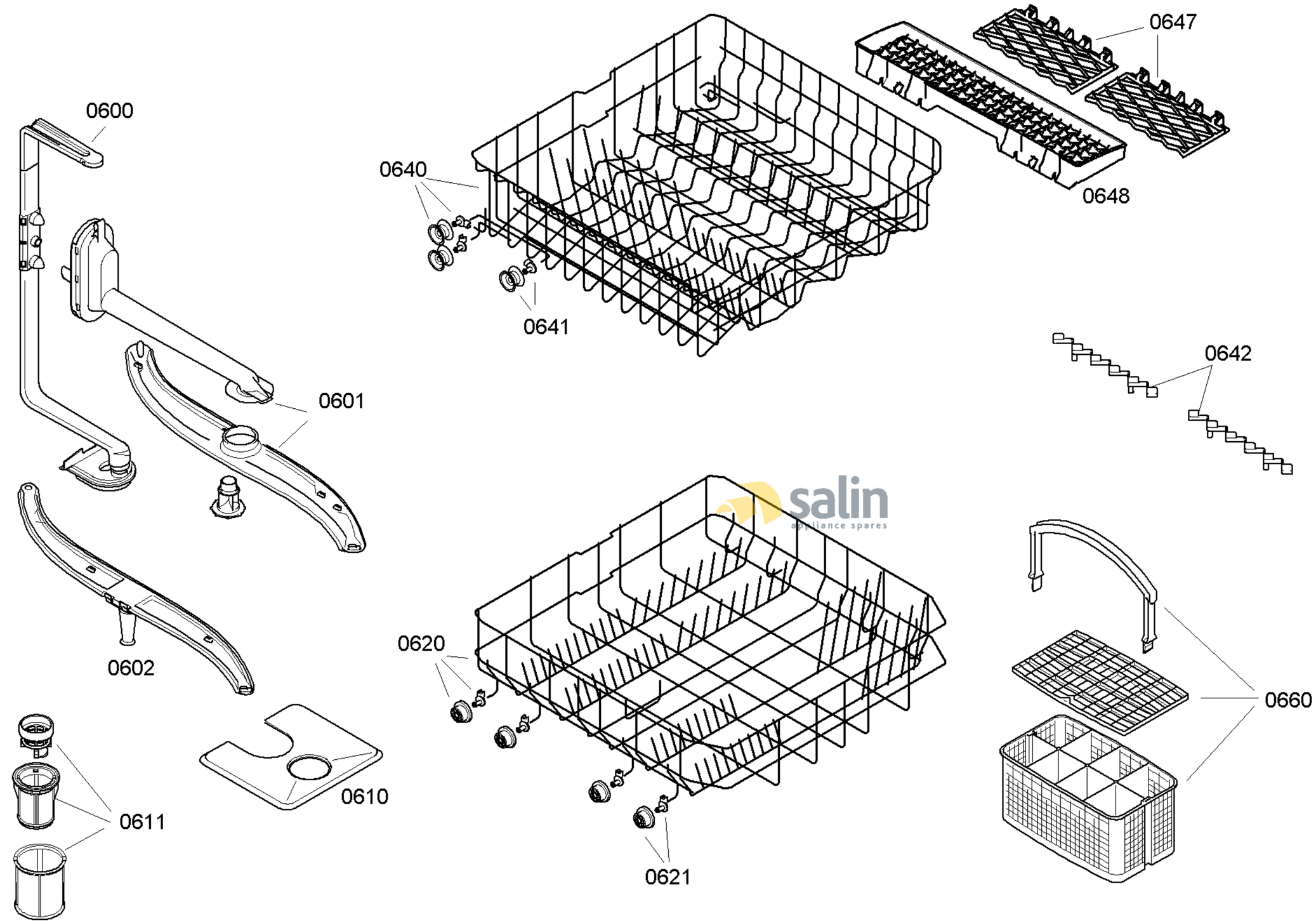

58300000114269 aet 000 b 6/6

FAMILY : SHV43A33EU
MODEL NO: SHV43A33EU/70
Check Position No/Part No or Replacement No