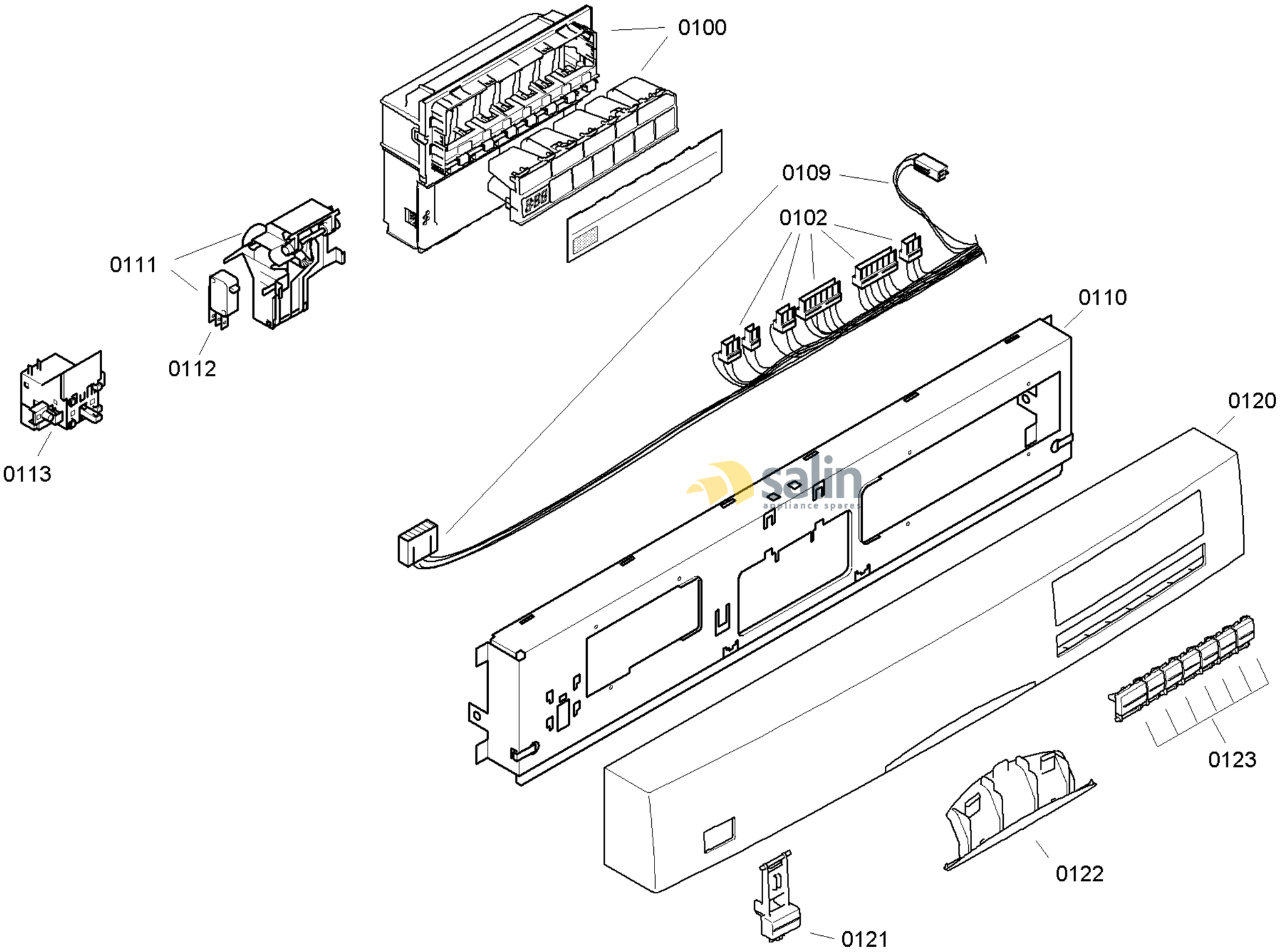

58300000116223 aet 000 d 1/6

FAMILY : SGS47M72II
MODEL NO: SGS47M72II/47
Check Position No/Part No or Replacement No

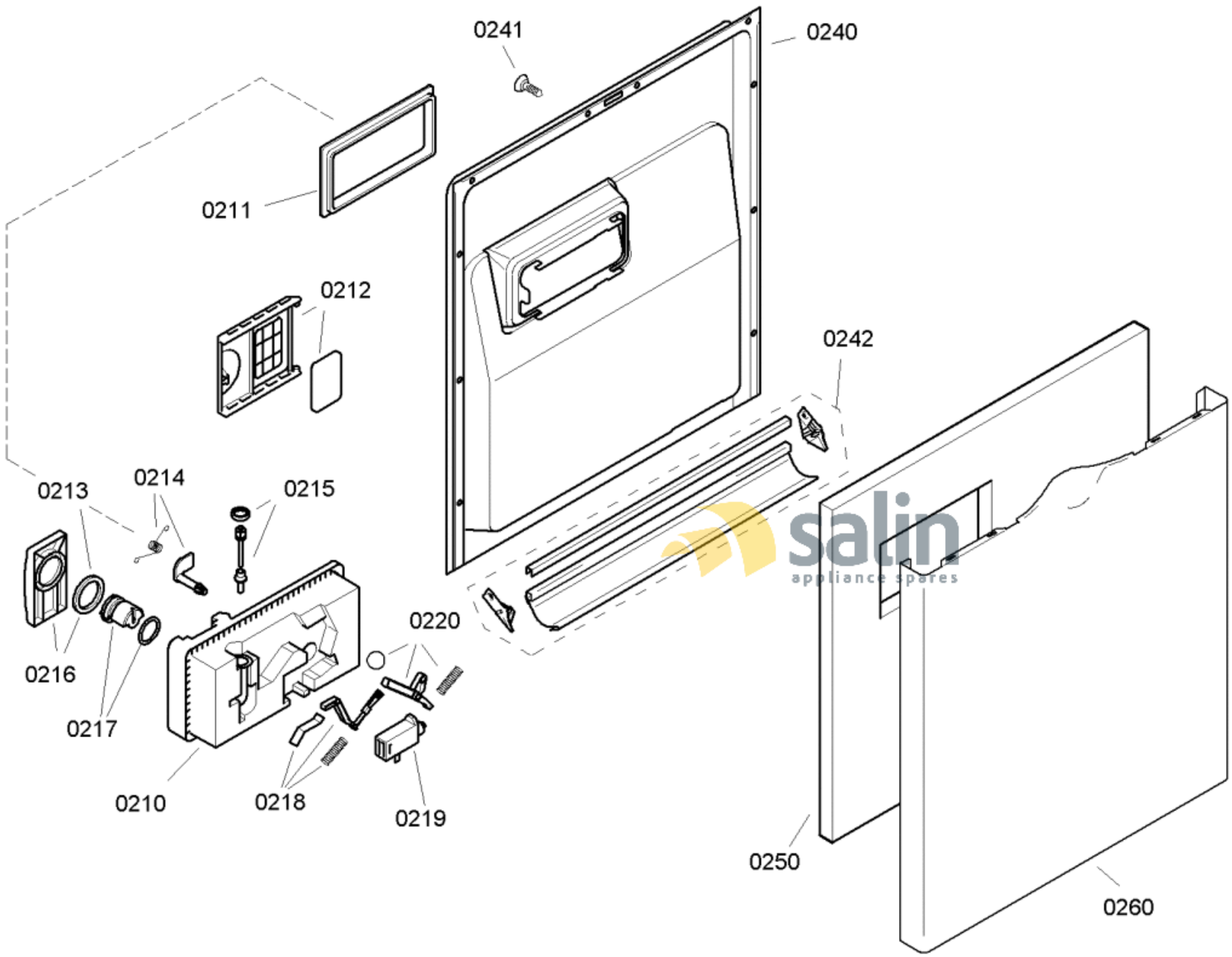

58300000116223 aet 000 d 2/6

FAMILY : SGS47M72II

MODEL NO: SGS47M72II/47

Check Position No/Part No or Replacement No

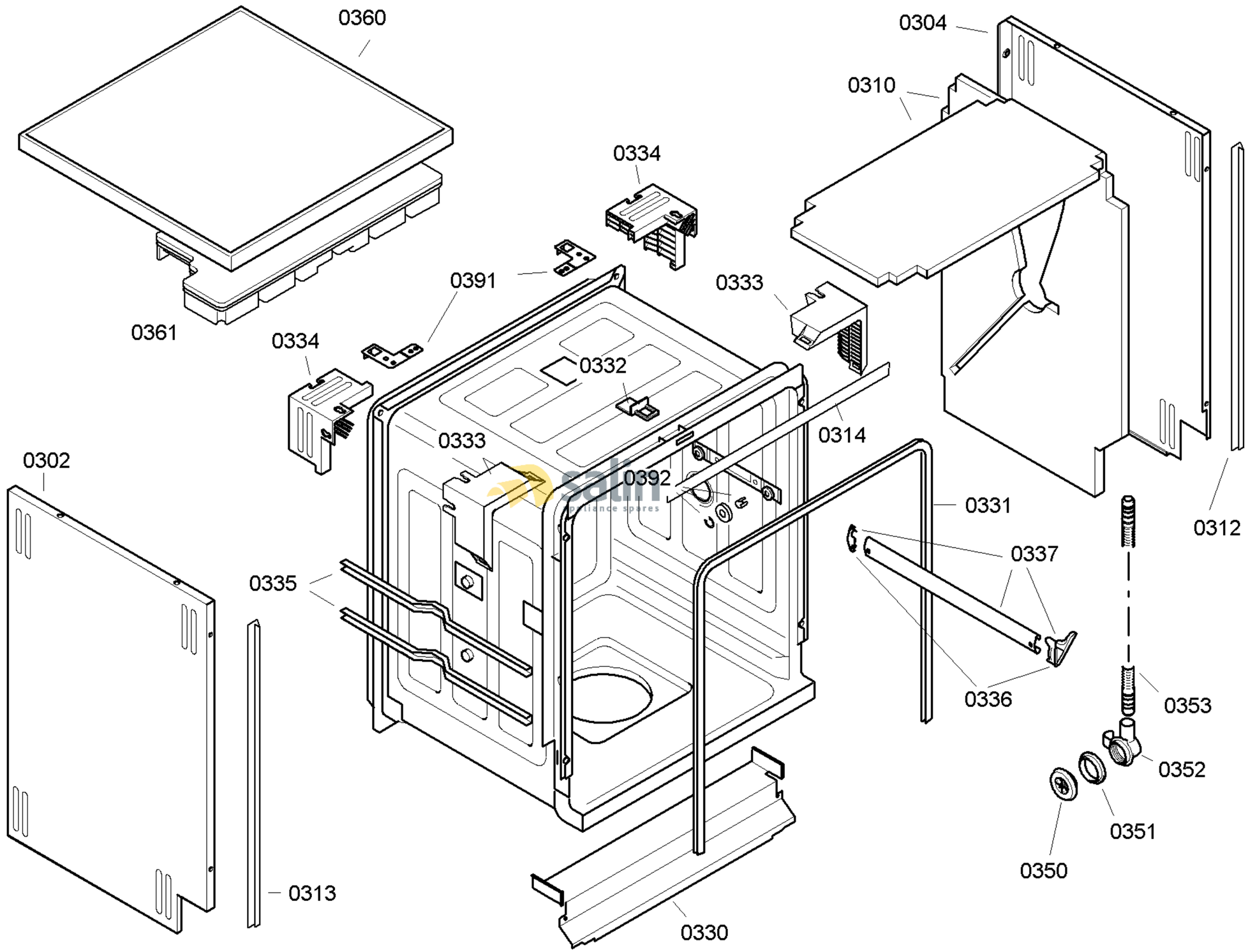

58300000116223 aet 000 d 3/6

FAMILY : SGS47M72II
MODEL NO: SGS47M72II/47
Check Position No/Part No or Replacement No

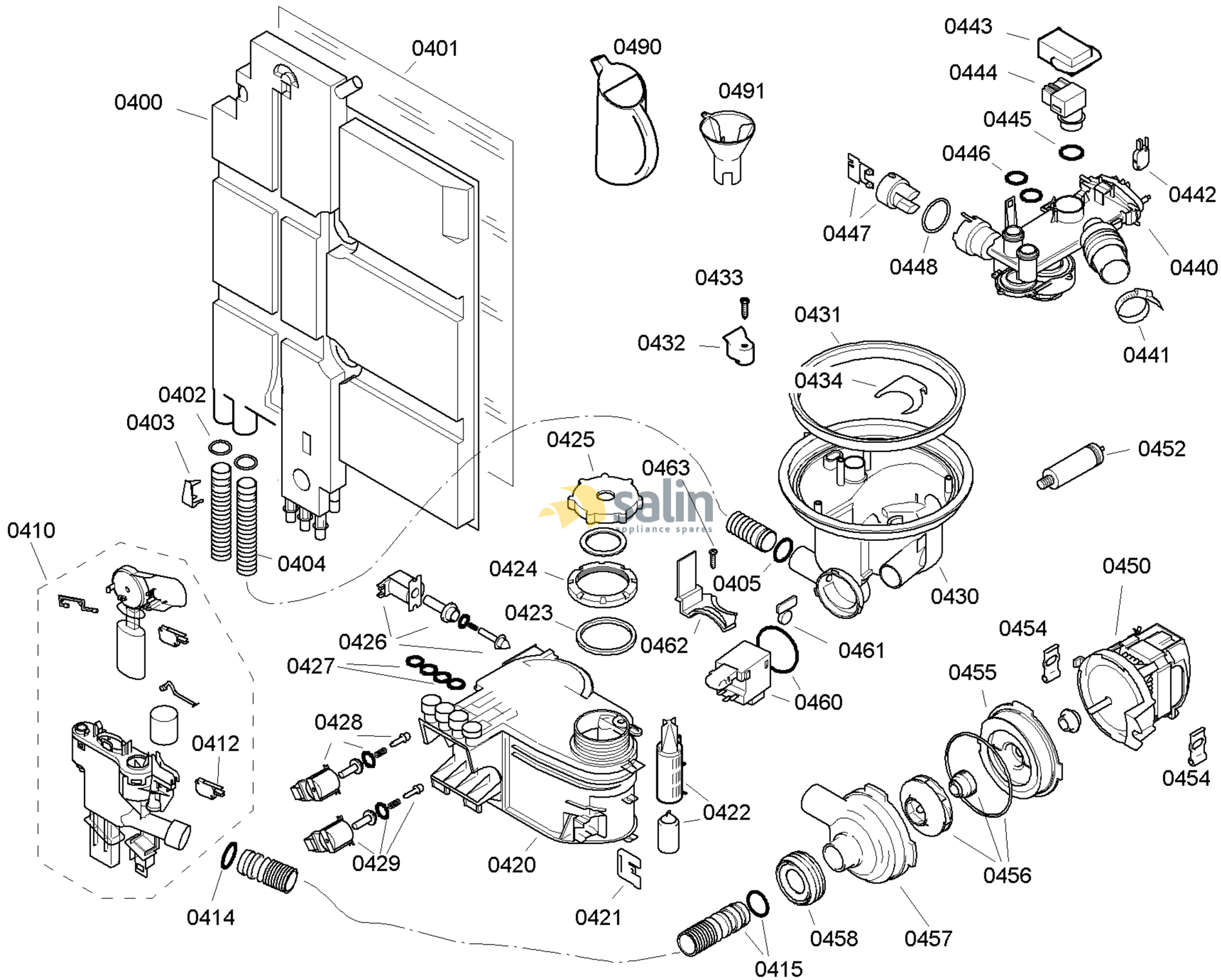

58300000116223 aet 000 d 4/6

FAMILY : SGS47M72II
MODEL NO: SGS47M72II/47
Check Position No/Part No or Replacement No

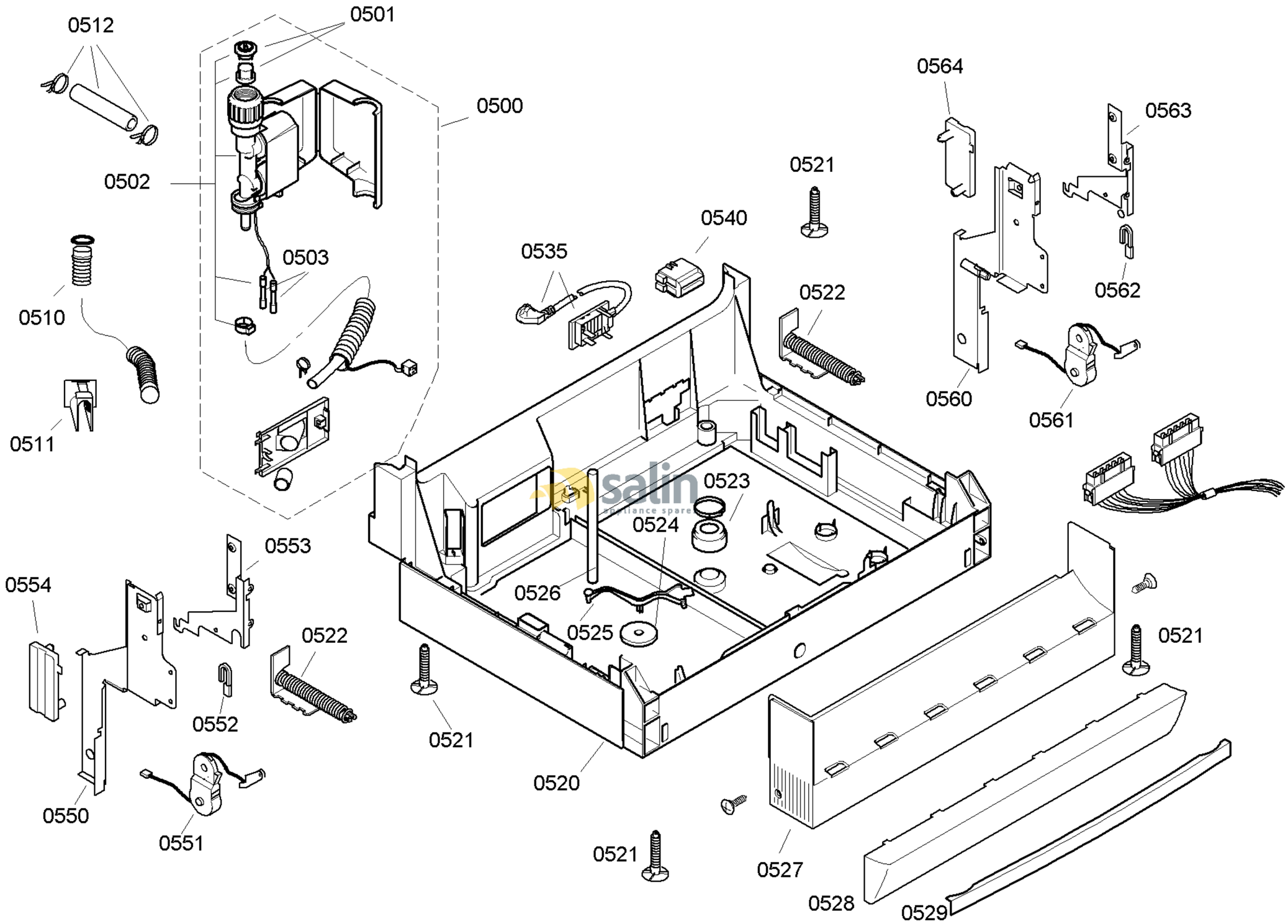

58300000116223 aet 000 d 5/6

FAMILY : SGS47M72II
MODEL NO: SGS47M72II/47
Check Position No/Part No or Replacement No

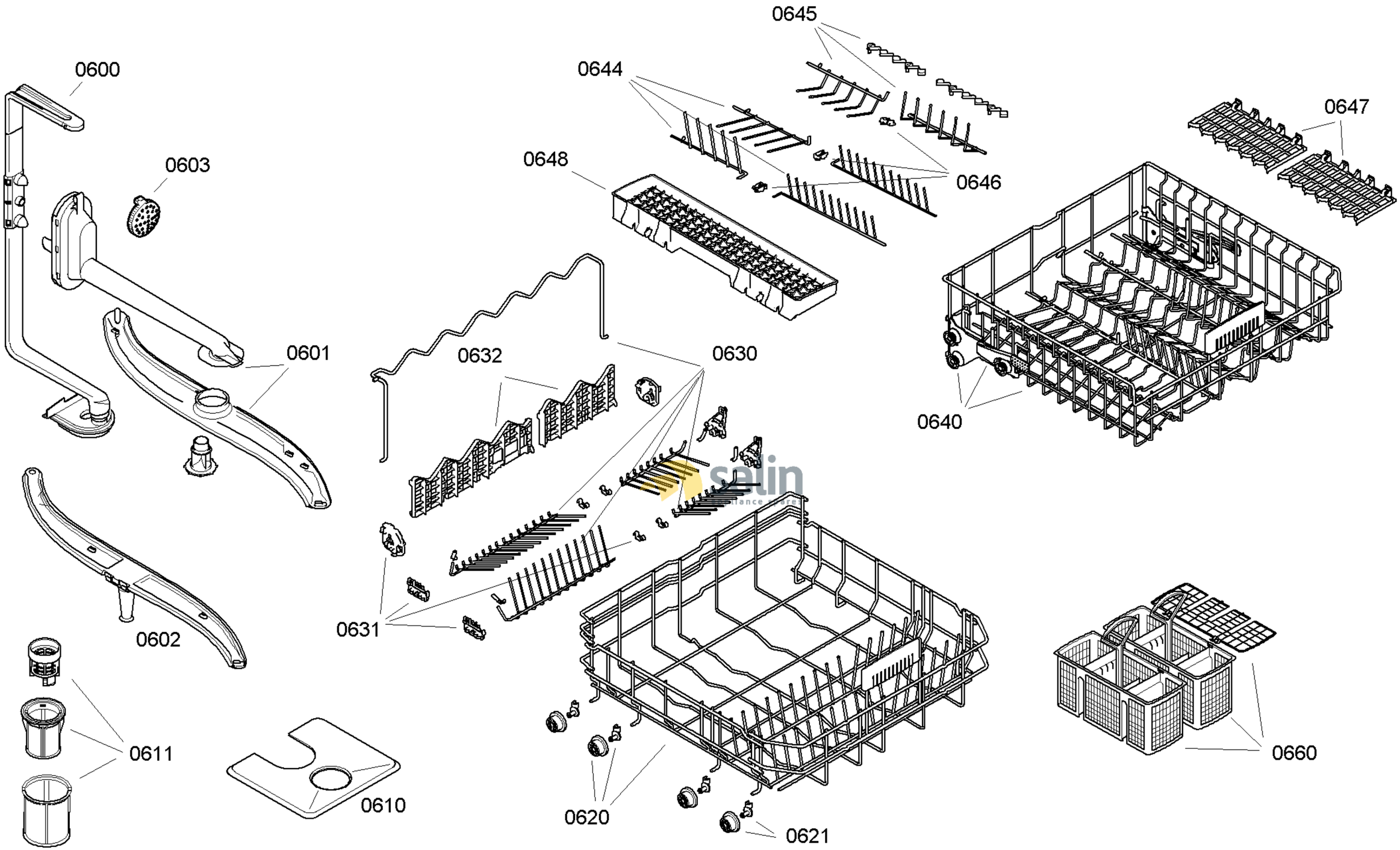

58300000116223 aet 000 d 6/6

FAMILY : SGS47M72II
MODEL NO: SGS47M72II/47
Check Position No/Part No or Replacement No