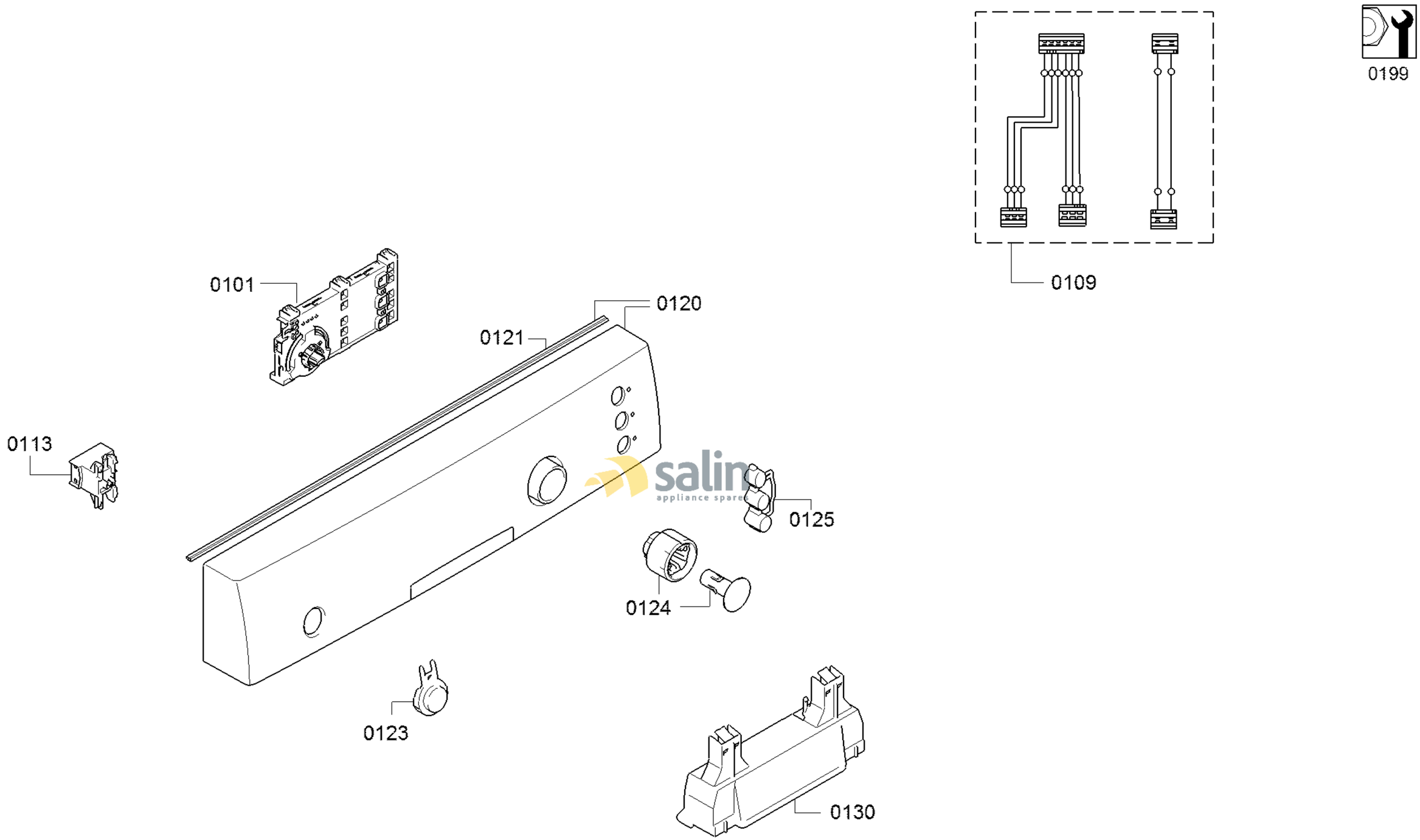

58300000188926 aet 000 b 1/6

FAMILY : SPS50E18EU
MODEL NO: SPS50E18EU/29
Check Position No/Part No or Replacement No

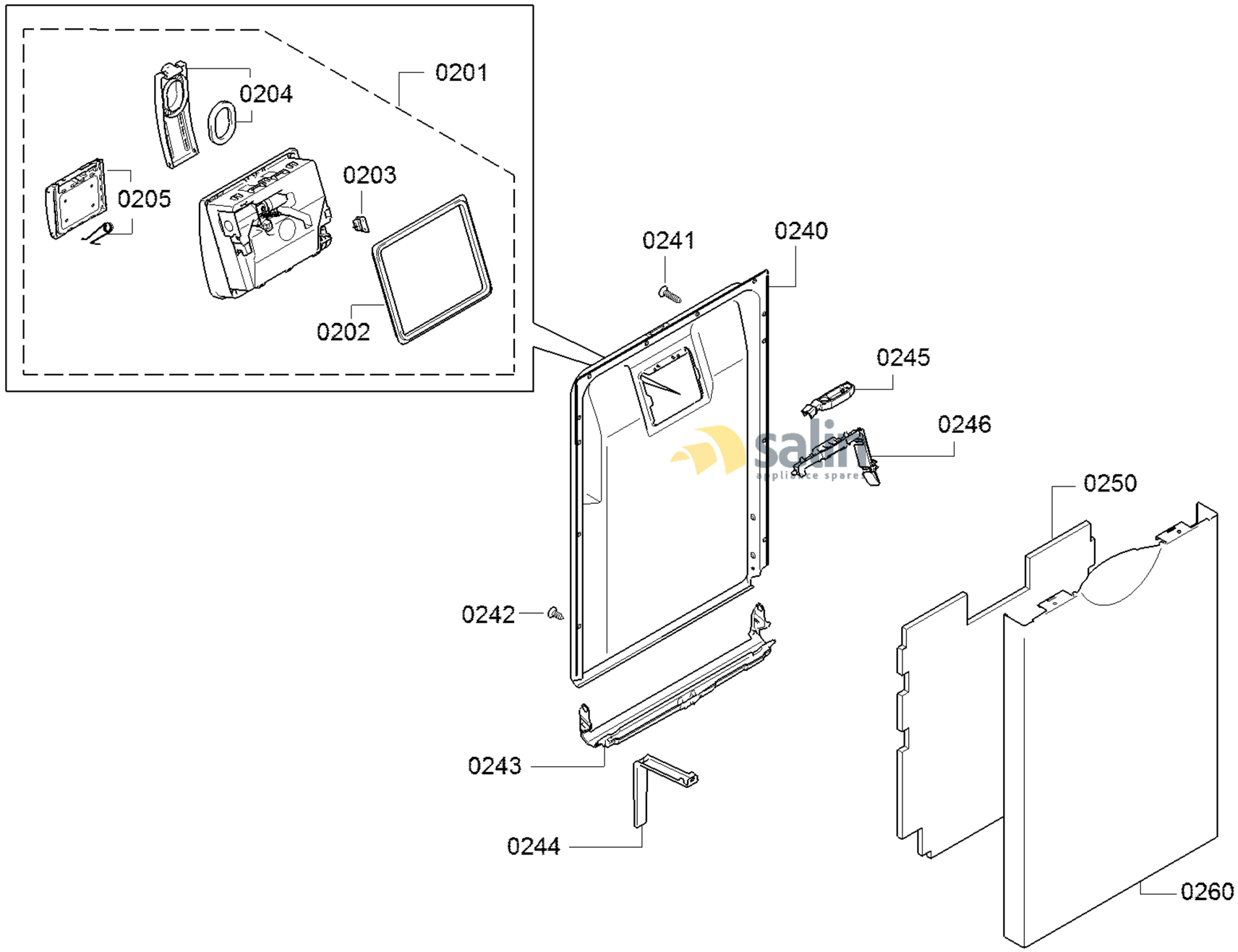

58300000188926 aet 000 b 2/6

FAMILY : SPS50E18EU
MODEL NO: SPS50E18EU/29
Check Position No/Part No or Replacement No

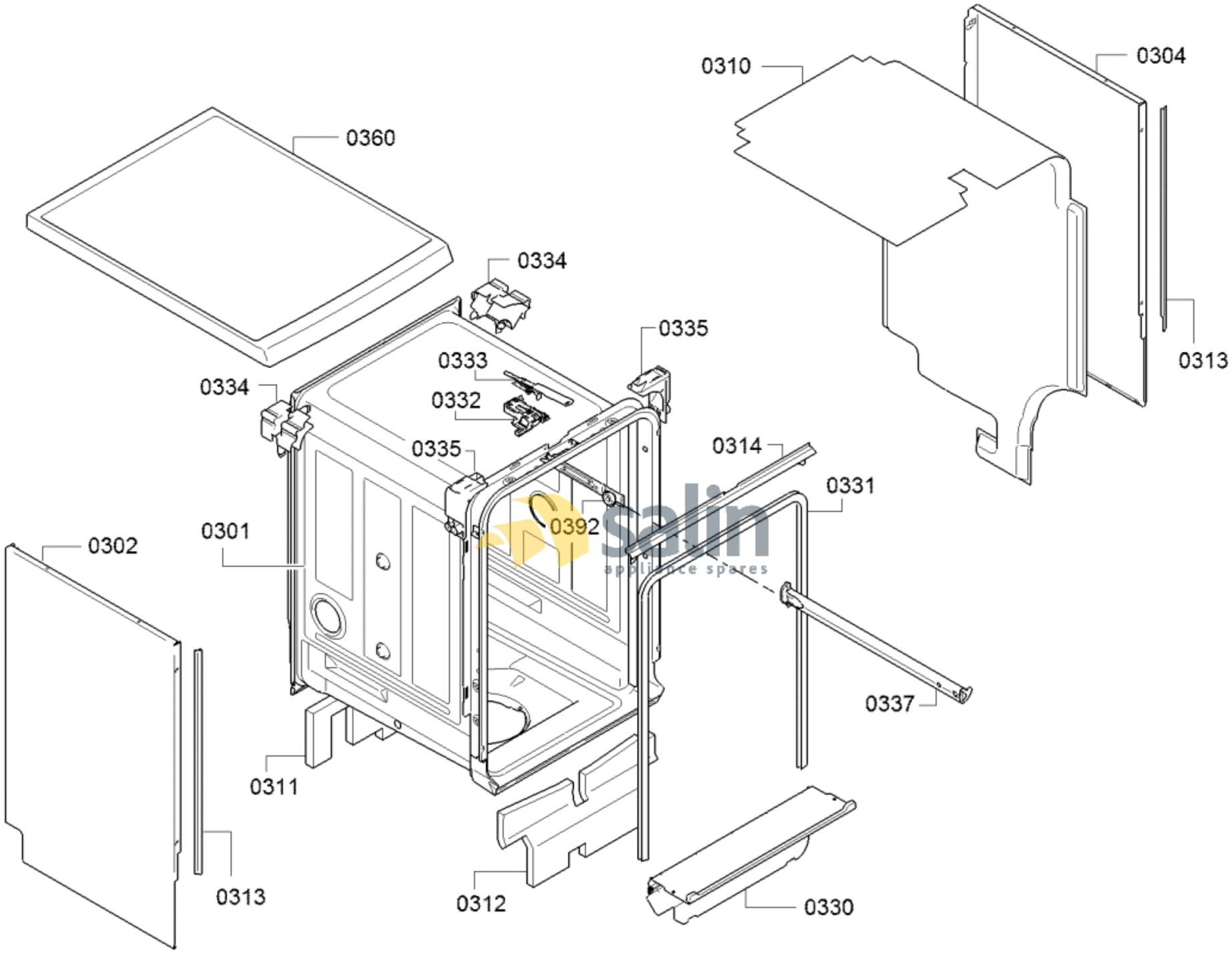

58300000188926 aet 000 b 3/6

FAMILY : SPS50E18EU

MODEL NO: SPS50E18EU/29

Check Position No/Part No or Replacement No

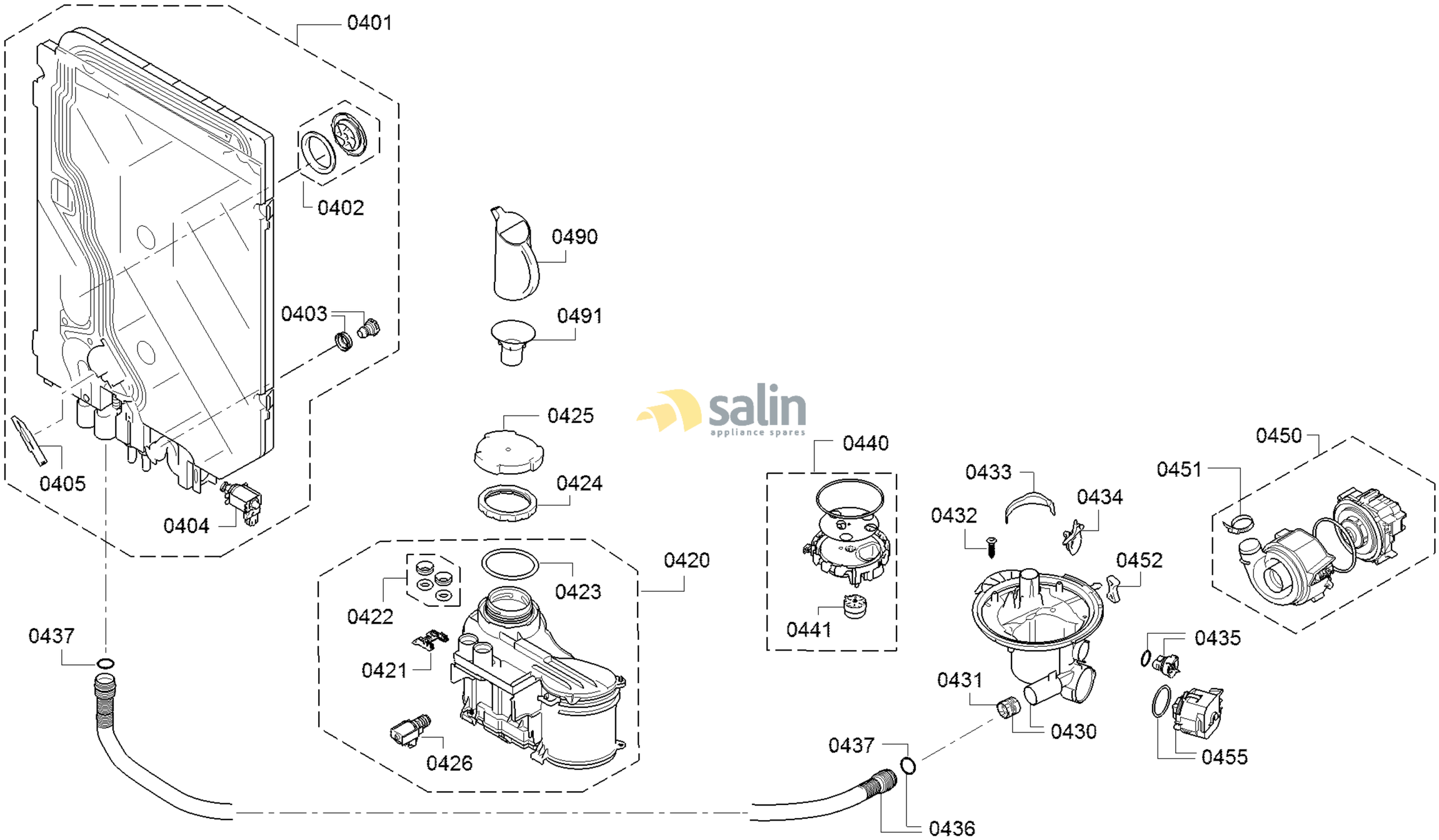

58300000188926 aet 000 b 4/6

FAMILY : SPS50E18EU
MODEL NO: SPS50E18EU/29
Check Position No/Part No or Replacement No

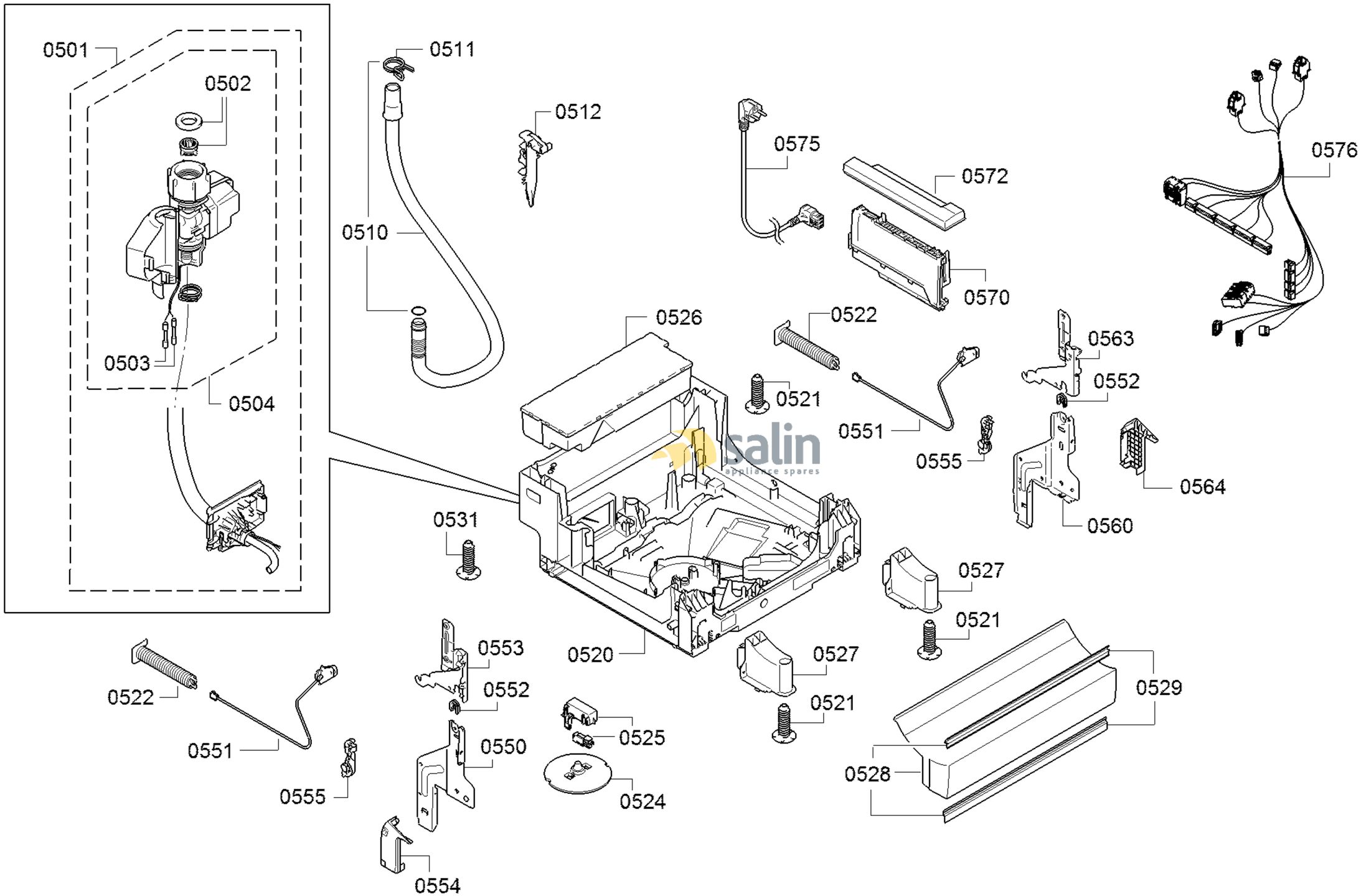

58300000188926 aet 000 b 5/6

FAMILY : SPS50E18EU
MODEL NO: SPS50E18EU/29
Check Position No/Part No or Replacement No

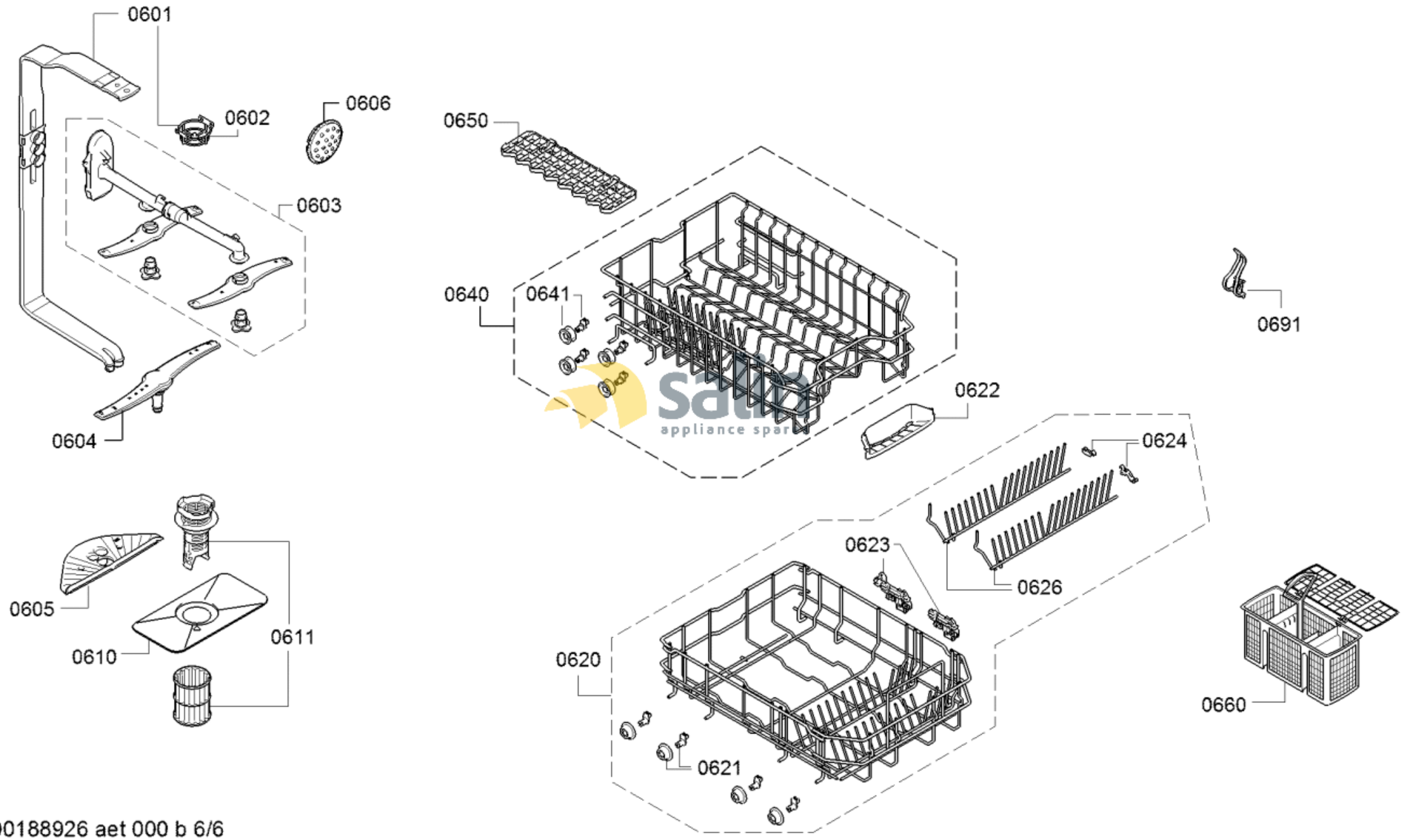

58300000188926 aet 000 b 6/6

FAMILY : SPS50E18EU

MODEL NO: SPS50E18EU/29

Check Position No/Part No or Replacement No