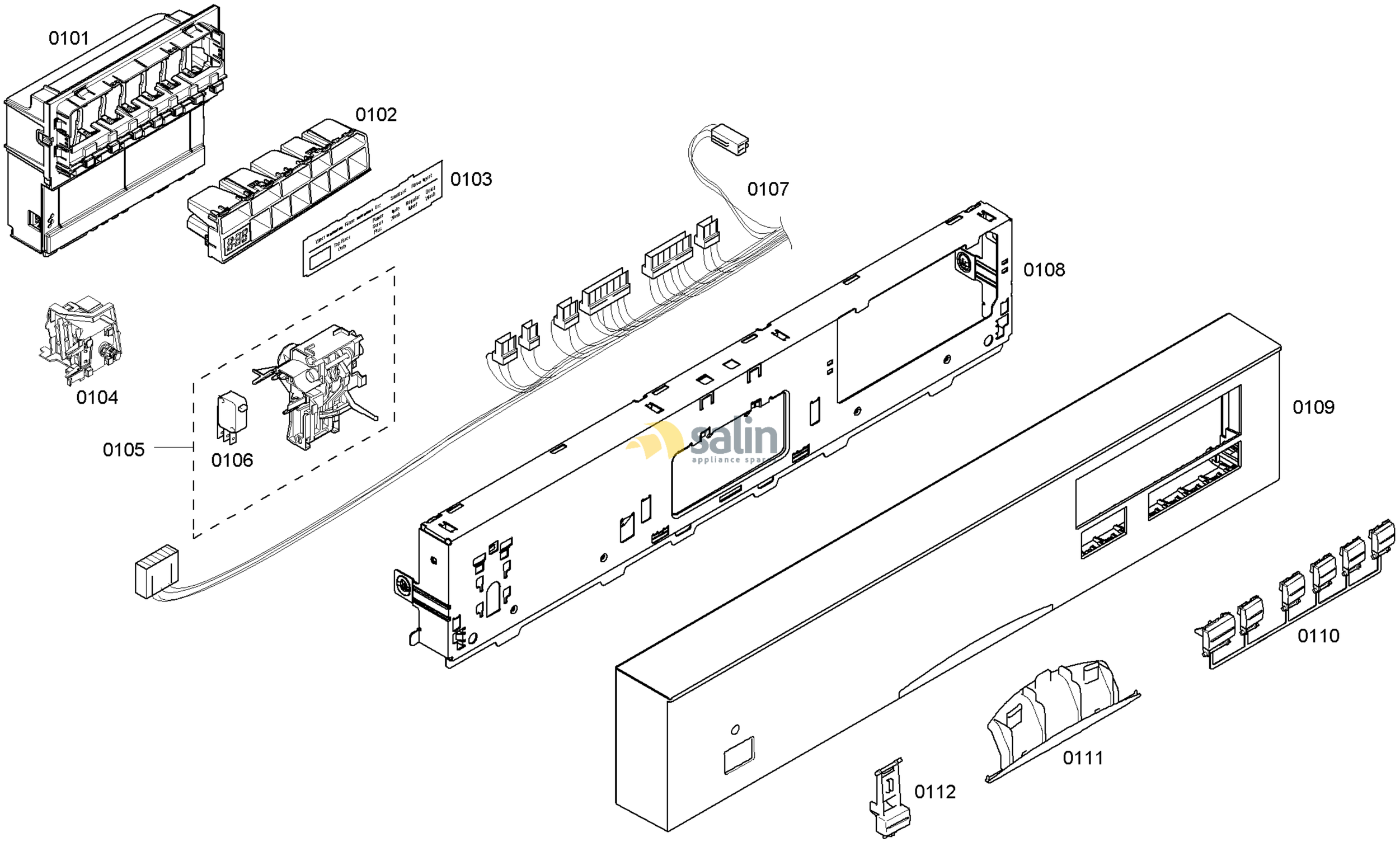

58300000125493 aet 000 a 1/6

FAMILY : SHE47C05UC
MODEL NO: SHE47C05UC/48
Check Position No/Part No or Replacement No

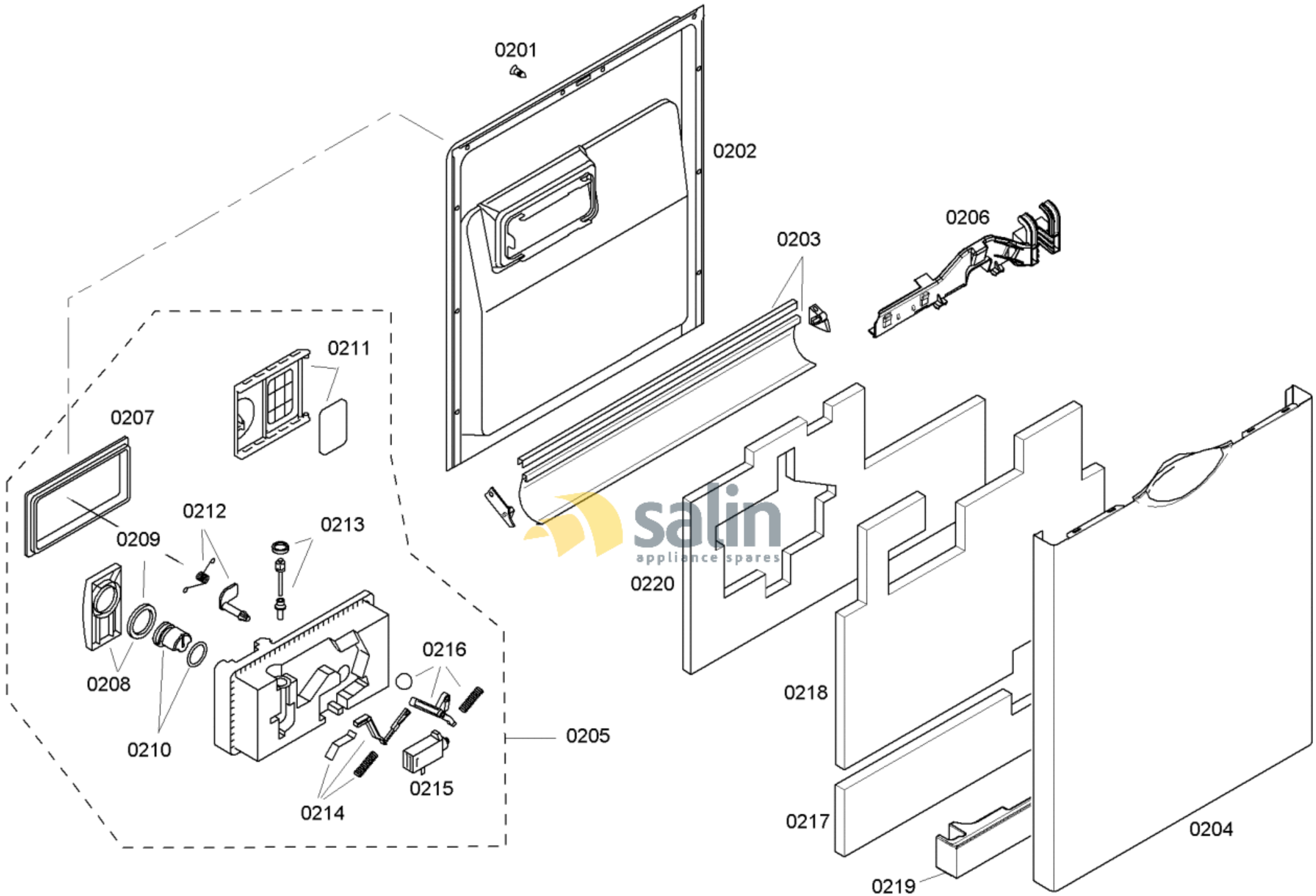

58300000125493 aet 000 a 2/6

FAMILY : SHE47C05UC

MODEL NO: SHE47C05UC/48

Check Position No/Part No or Replacement No

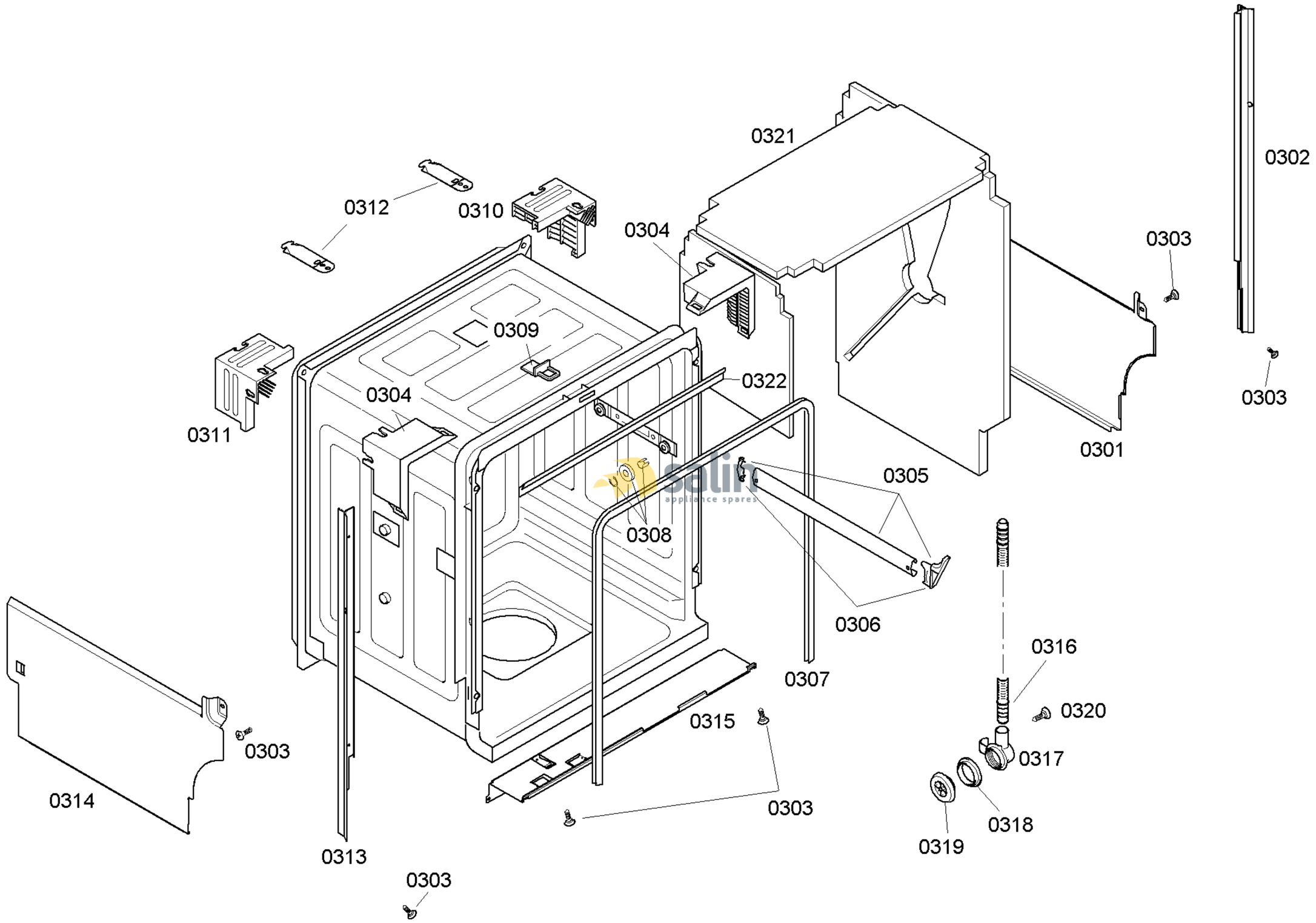

58300000125493 aet 000 a 3/6

FAMILY : SHE47C05UC
MODEL NO: SHE47C05UC/48
Check Position No/Part No or Replacement No

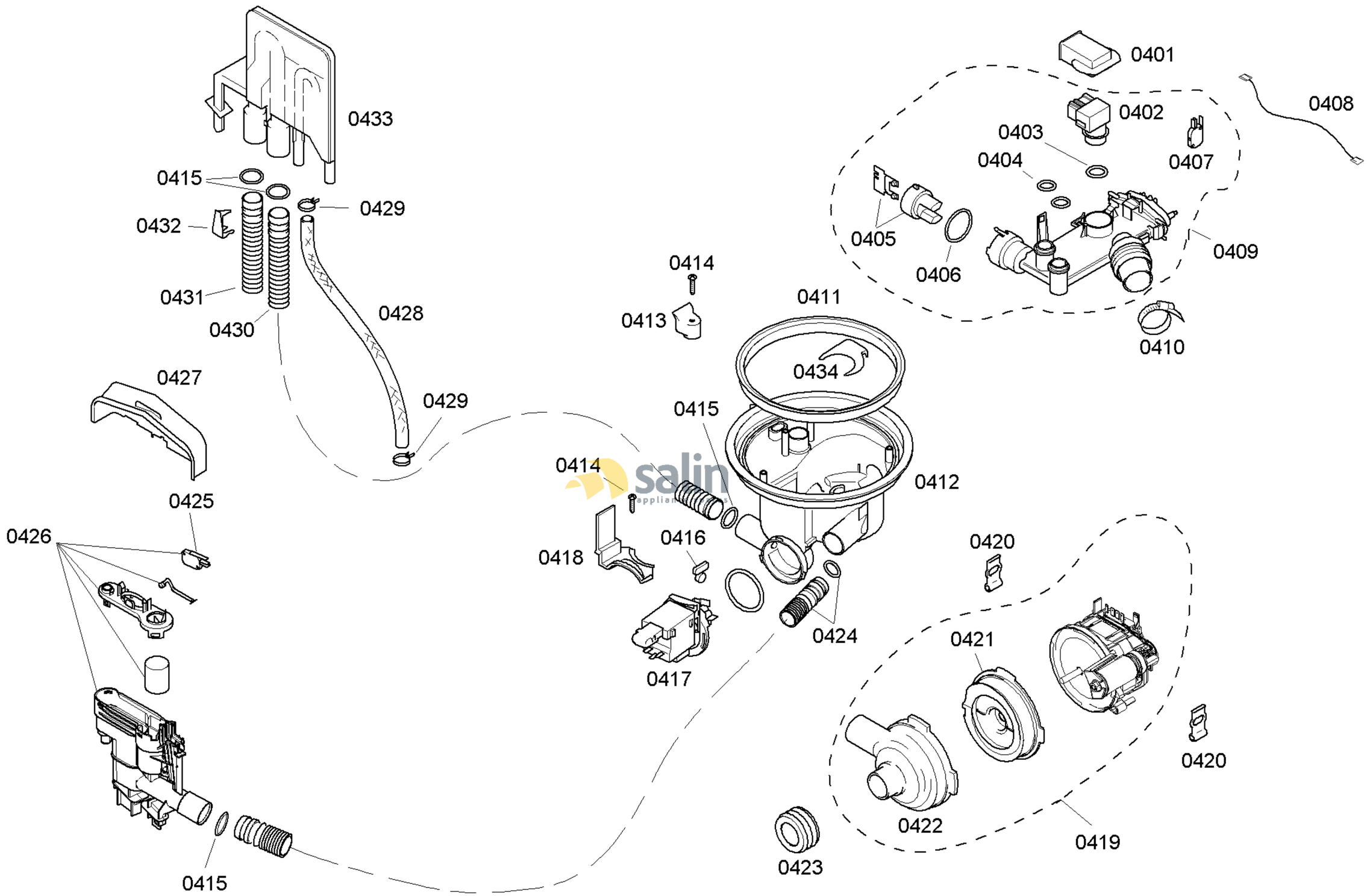

58300000125493 aet 000 a 4/6

FAMILY : SHE47C05UC
MODEL NO: SHE47C05UC/48
Check Position No/Part No or Replacement No

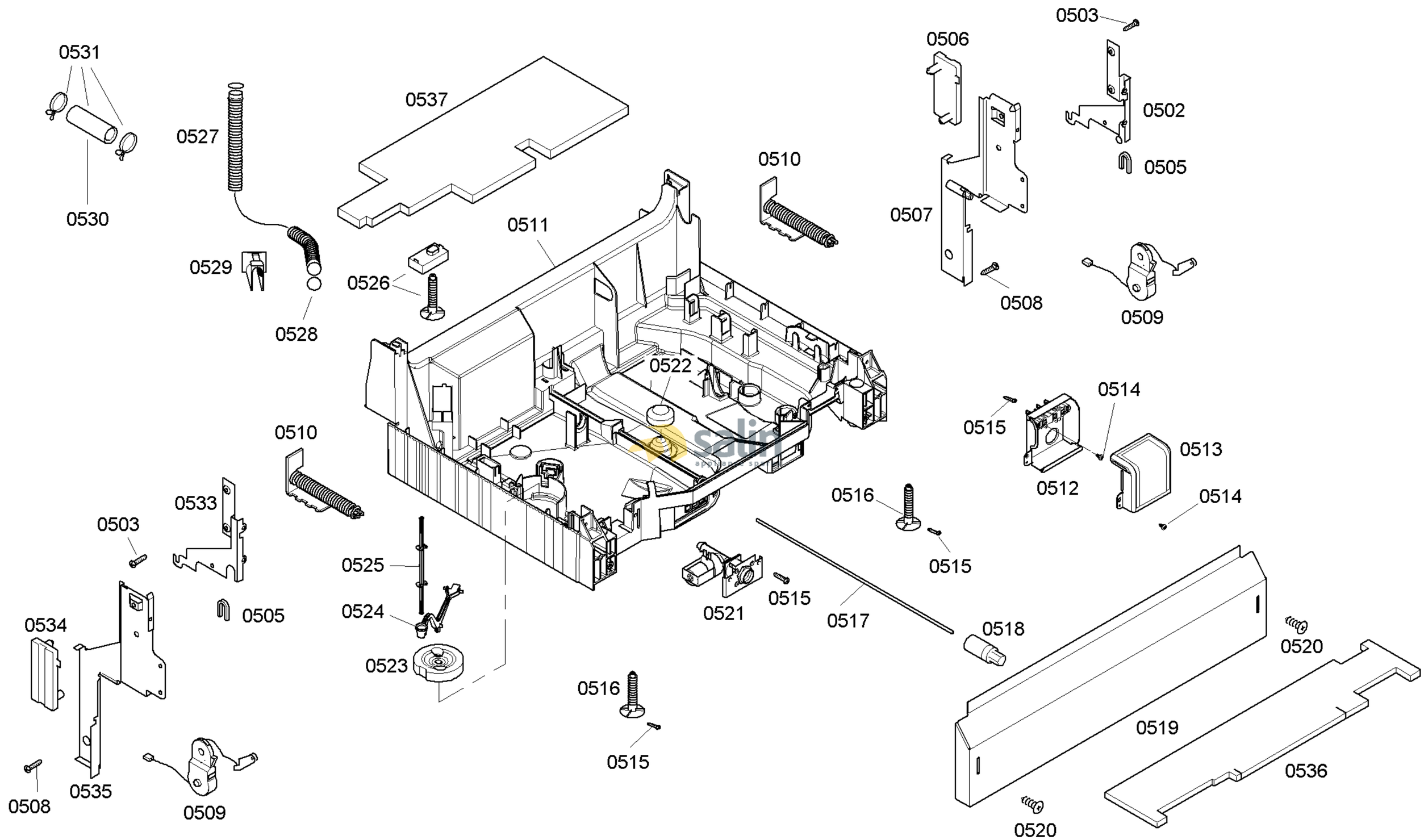

58300000125493 aet 000 a 5/6

FAMILY : SHE47C05UC
MODEL NO: SHE47C05UC/48
Check Position No/Part No or Replacement No

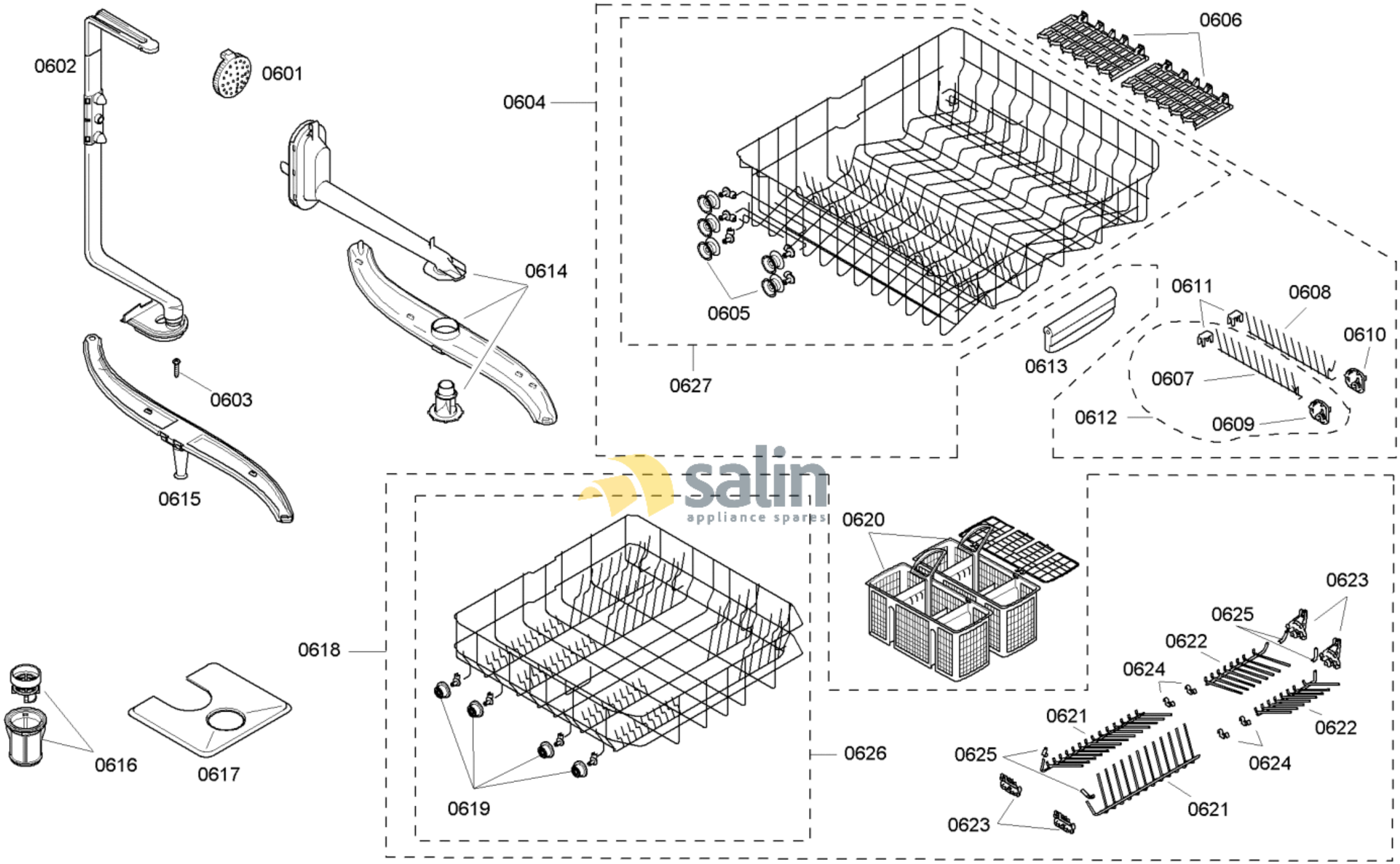

salin appliance spares

58300000125493 aet 000 a 6/6

FAMILY : SHE47C05UC

MODEL NO: SHE47C05UC/48

Check Position No/Part No or Replacement No