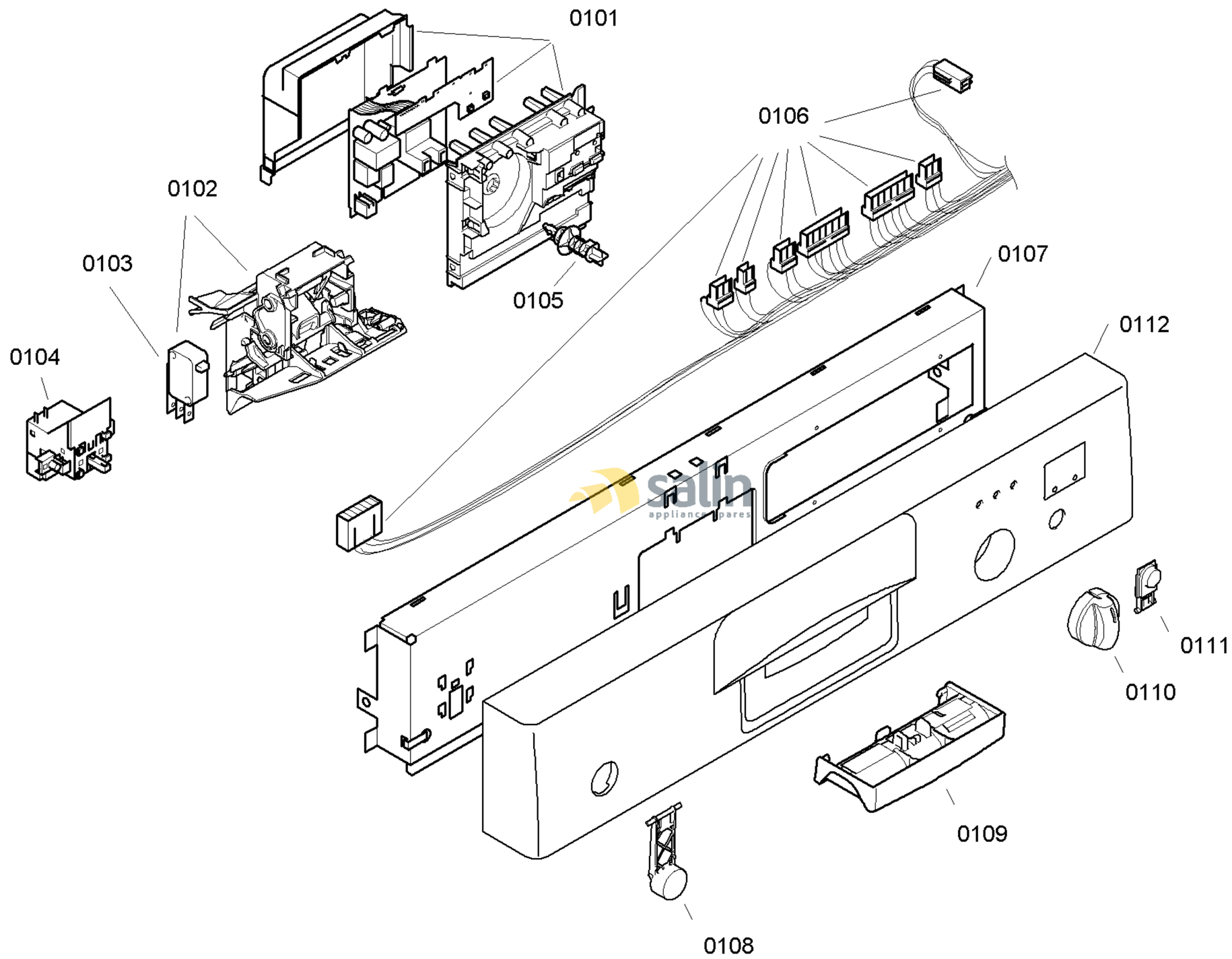

58300000119525 aet 000 b 1/6

FAMILY : SGS55E42EU
MODEL NO: SGS55E42EU/75
Check Position No/Part No or Replacement No

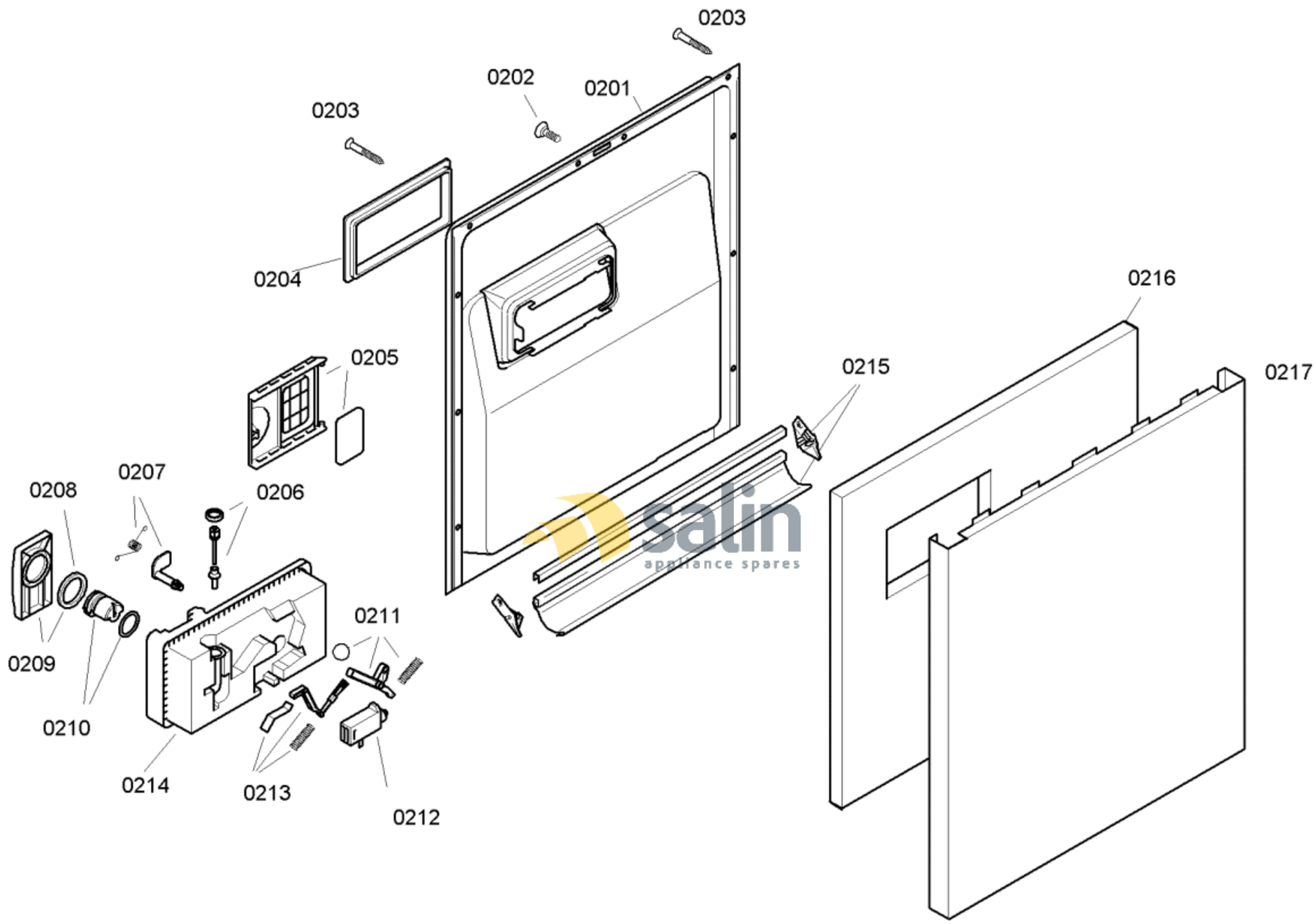

58300000119525 aet 000 b 2/6

FAMILY : SGS55E42EU

MODEL NO: SGS55E42EU/75

Check Position No/Part No or Replacement No

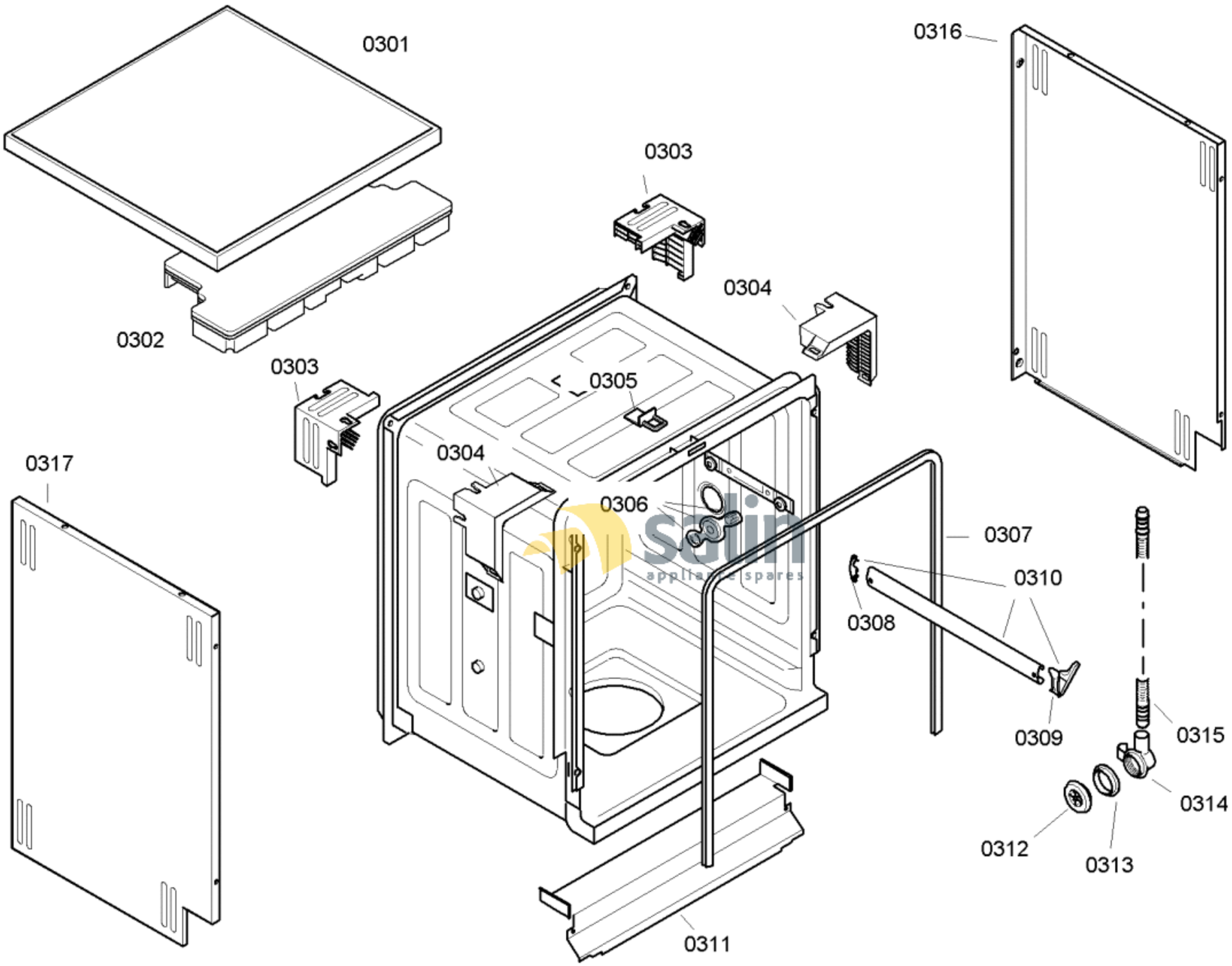

58300000119525 aet 000 b 3/6

FAMILY : SGS55E42EU

MODEL NO: SGS55E42EU/75

Check Position No/Part No or Replacement No

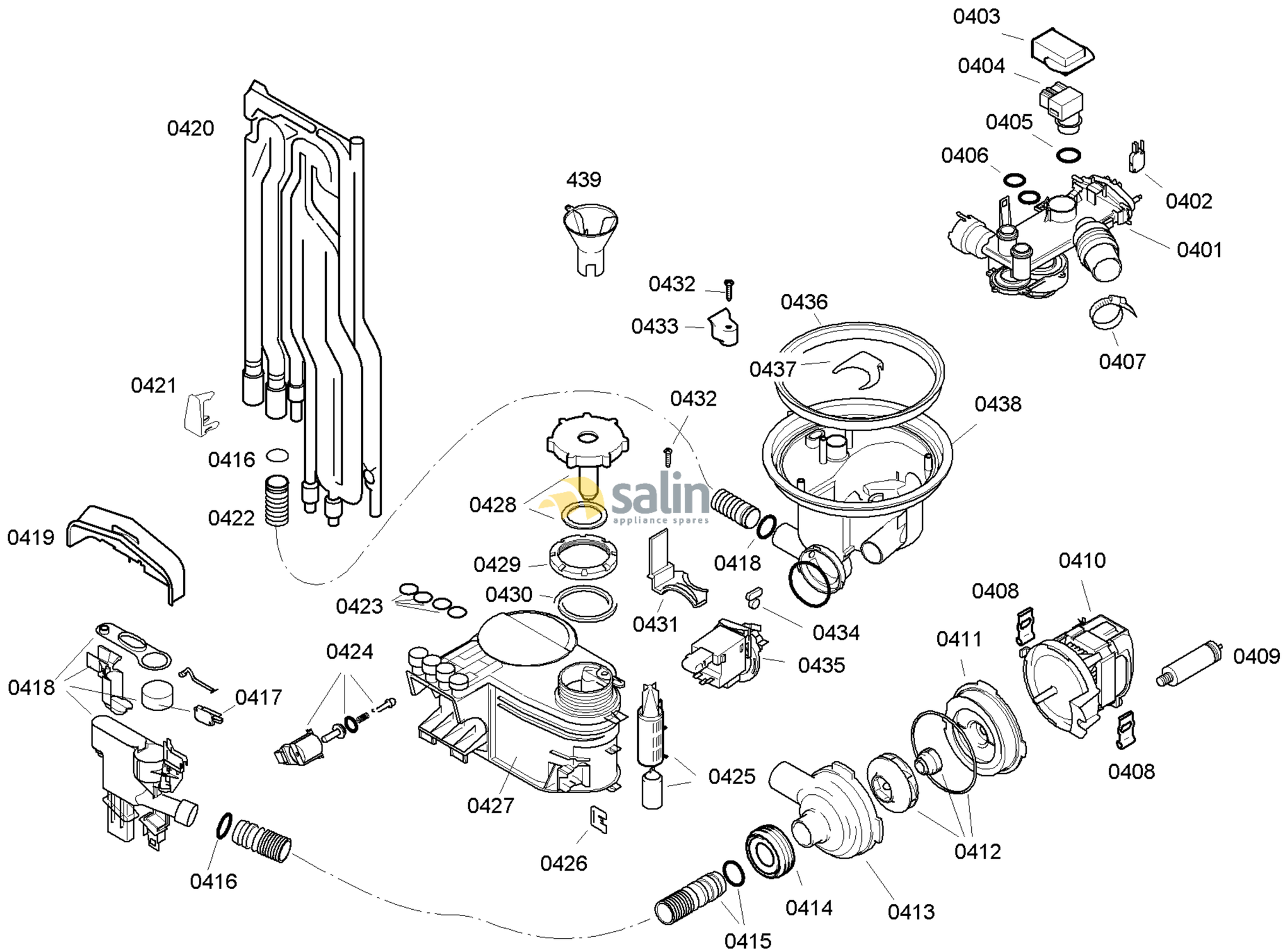

58300000119525 aet 000 b 4/6

FAMILY : SGS55E42EU
MODEL NO: SGS55E42EU/75
Check Position No/Part No or Replacement No

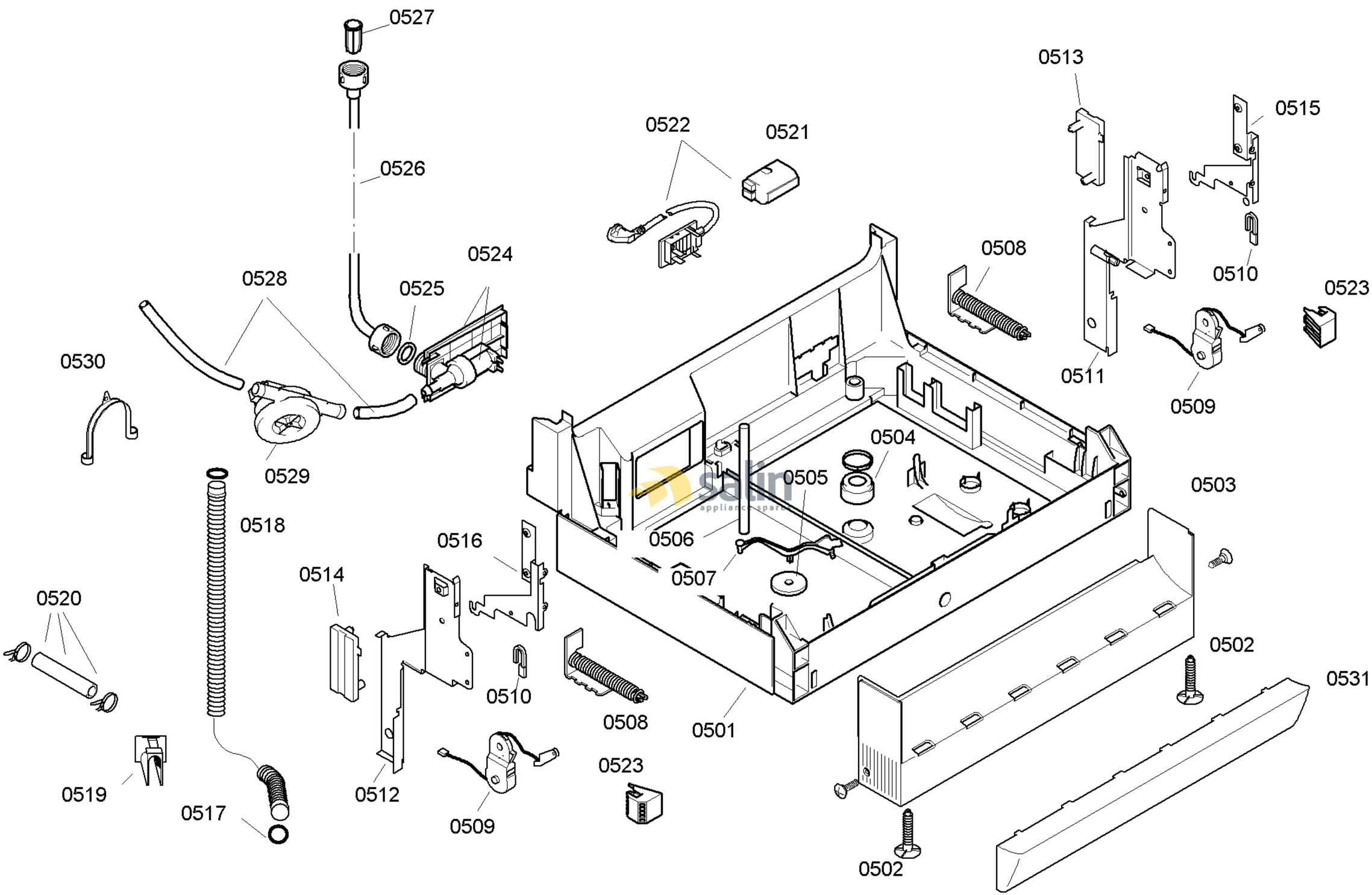

58300000119525 aet 000 b 5/6

FAMILY : SGS55E42EU
MODEL NO: SGS55E42EU/75
Check Position No/Part No or Replacement No

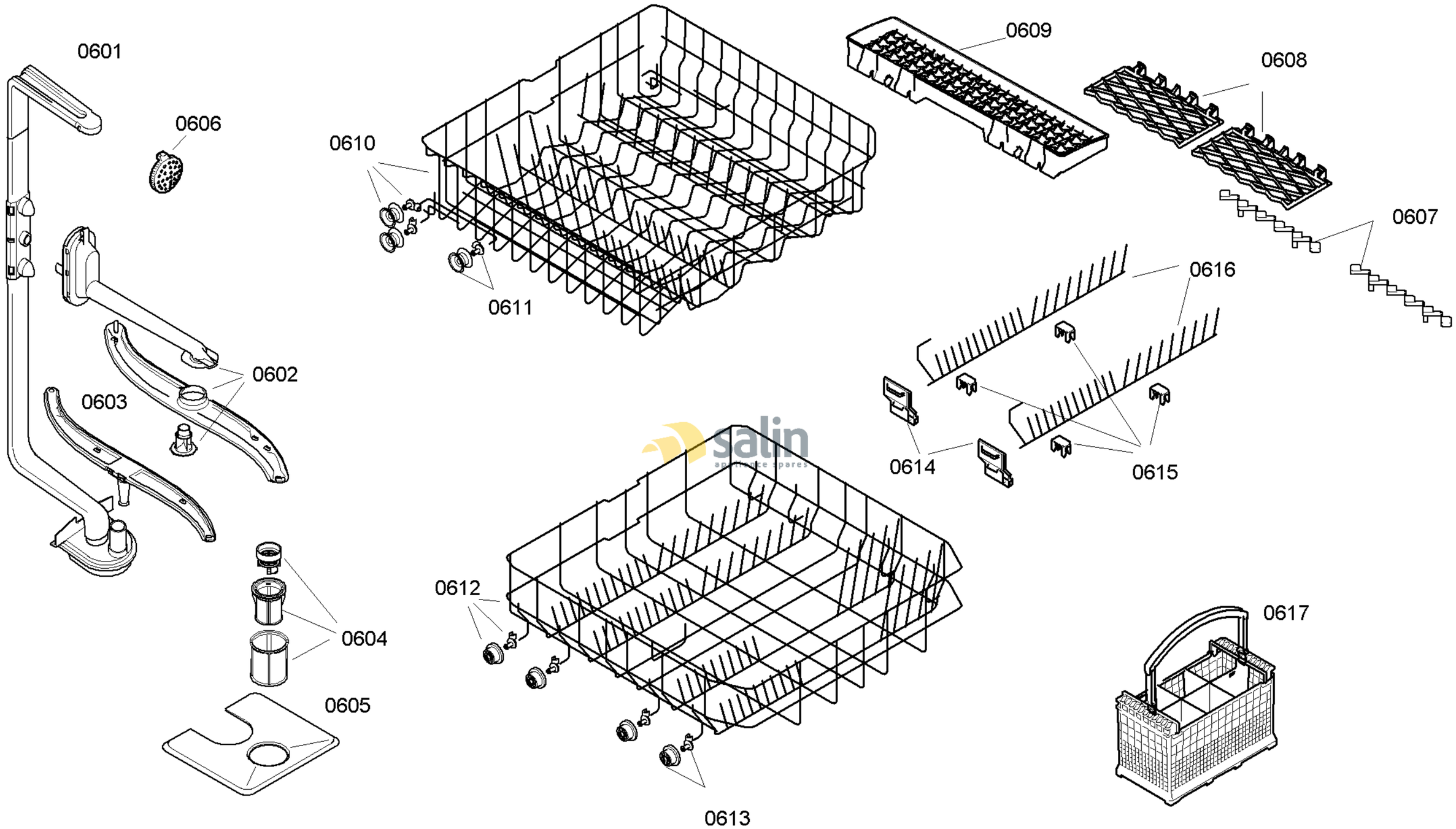

58300000119525 aet 000 b 6/6

FAMILY : SGS55E42EU
MODEL NO: SGS55E42EU/75
Check Position No/Part No or Replacement No