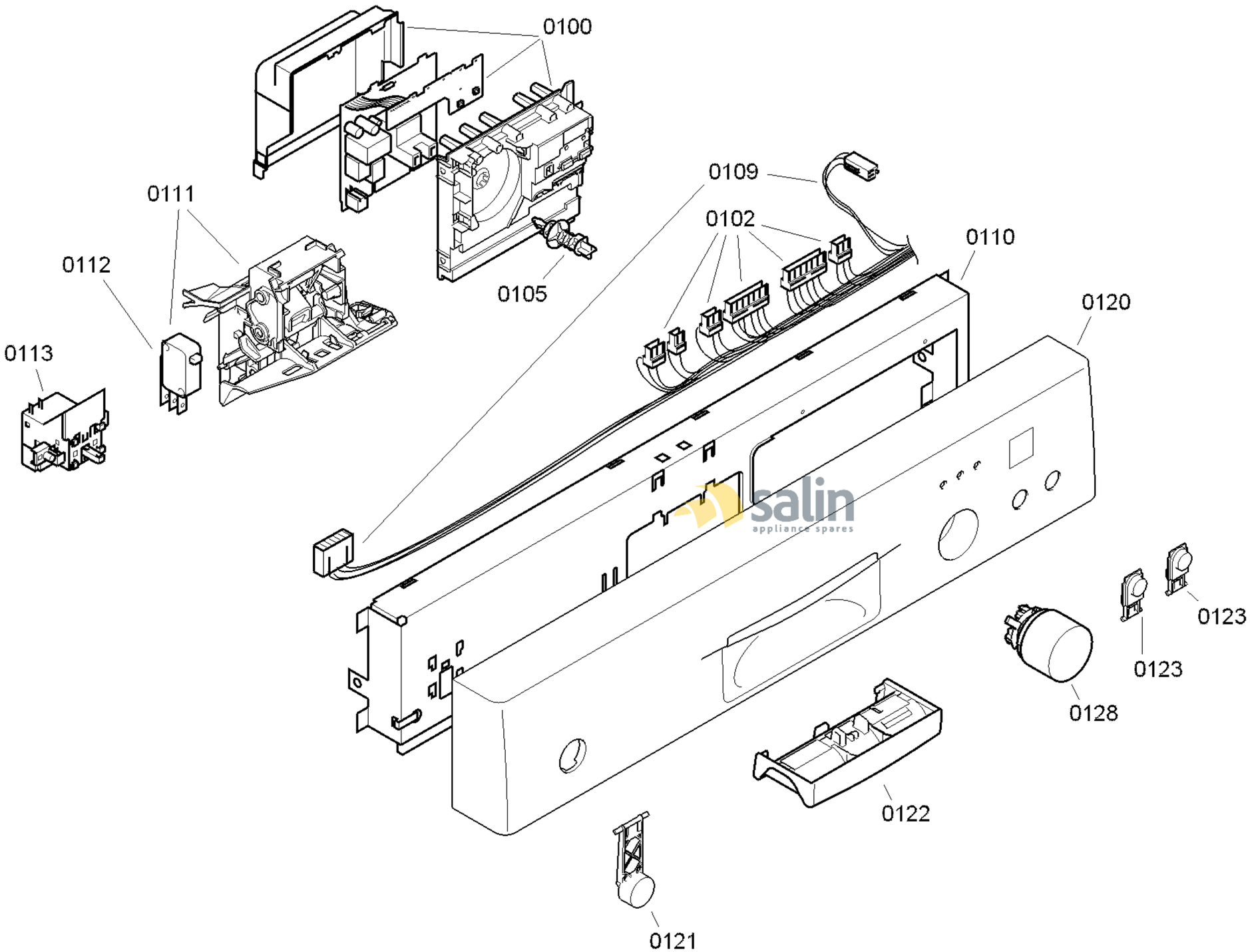

58300000117213 aet 000 f 1/6

FAMILY : SGS55E52EU
MODEL NO: SGS55E52EU/26
Check Position No/Part No or Replacement No

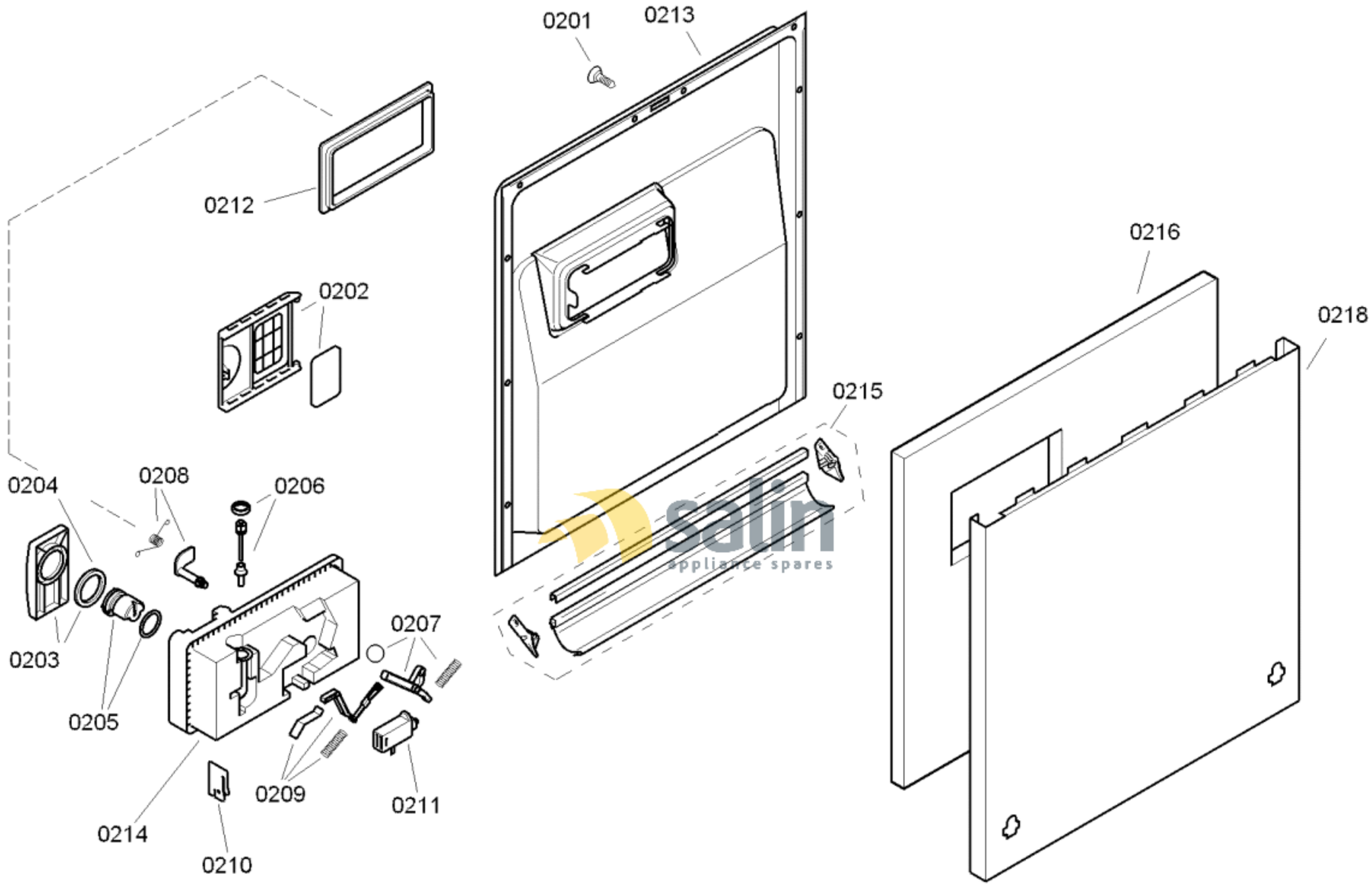

58300000117213 aet 000 f 2/6

FAMILY : SGS55E52EU

MODEL NO: SGS55E52EU/26

Check Position No/Part No or Replacement No

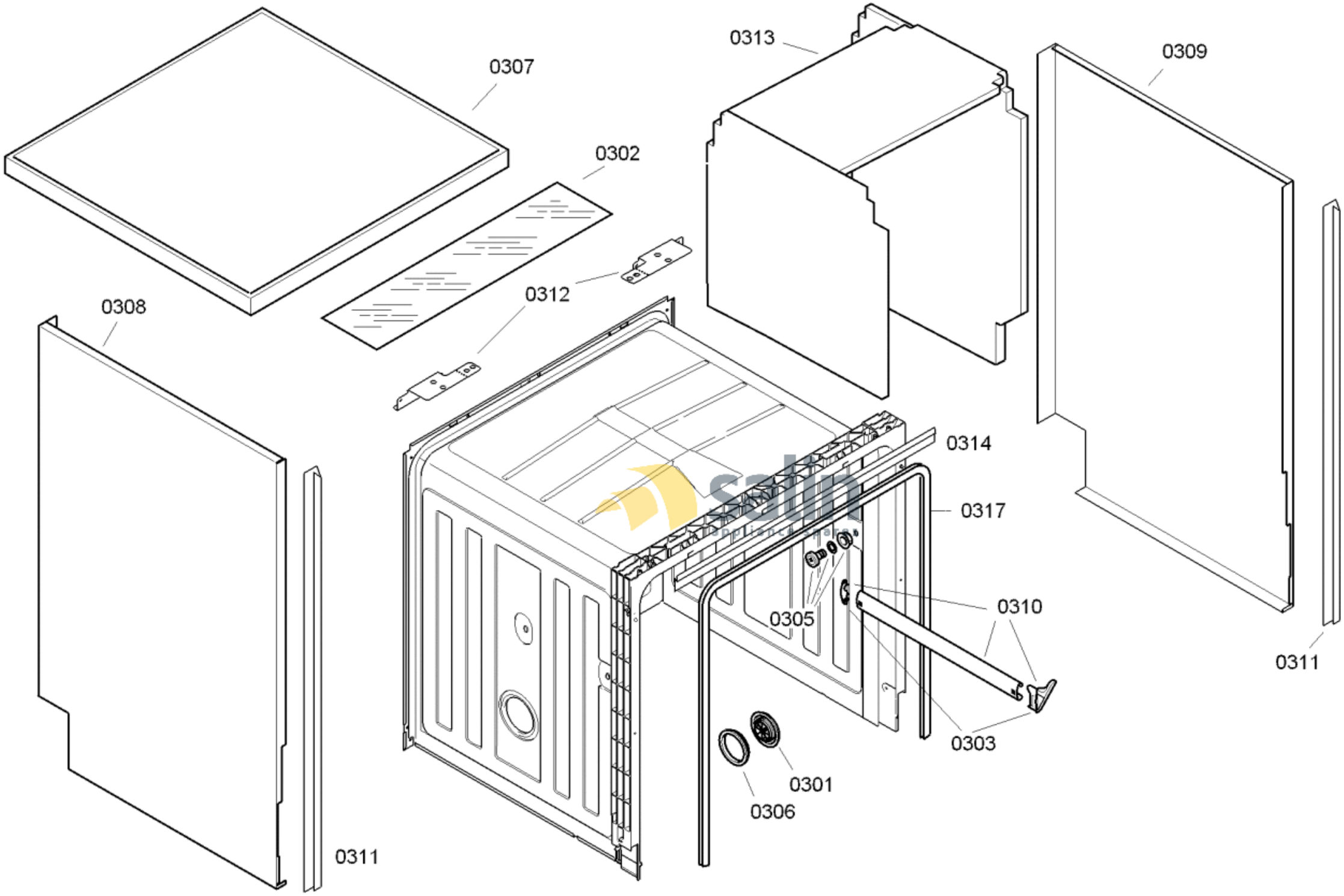

58300000117213 aet 000 f 3/6

FAMILY : SGS55E52EU

MODEL NO: SGS55E52EU/26

Check Position No/Part No or Replacement No

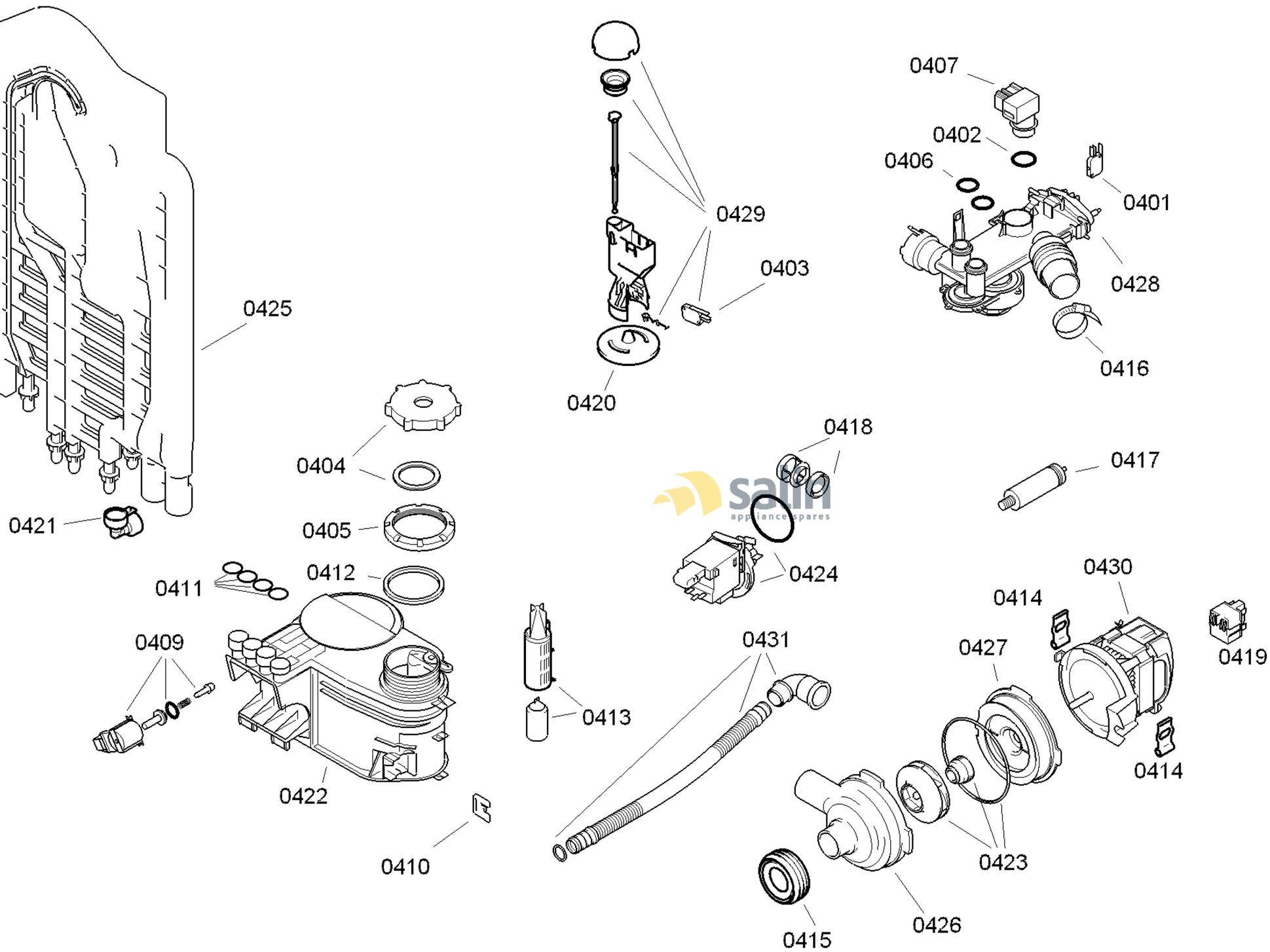

58300000117213 aet 000 f 4/6

FAMILY : SGS55E52EU
MODEL NO: SGS55E52EU/26
Check Position No/Part No or Replacement No

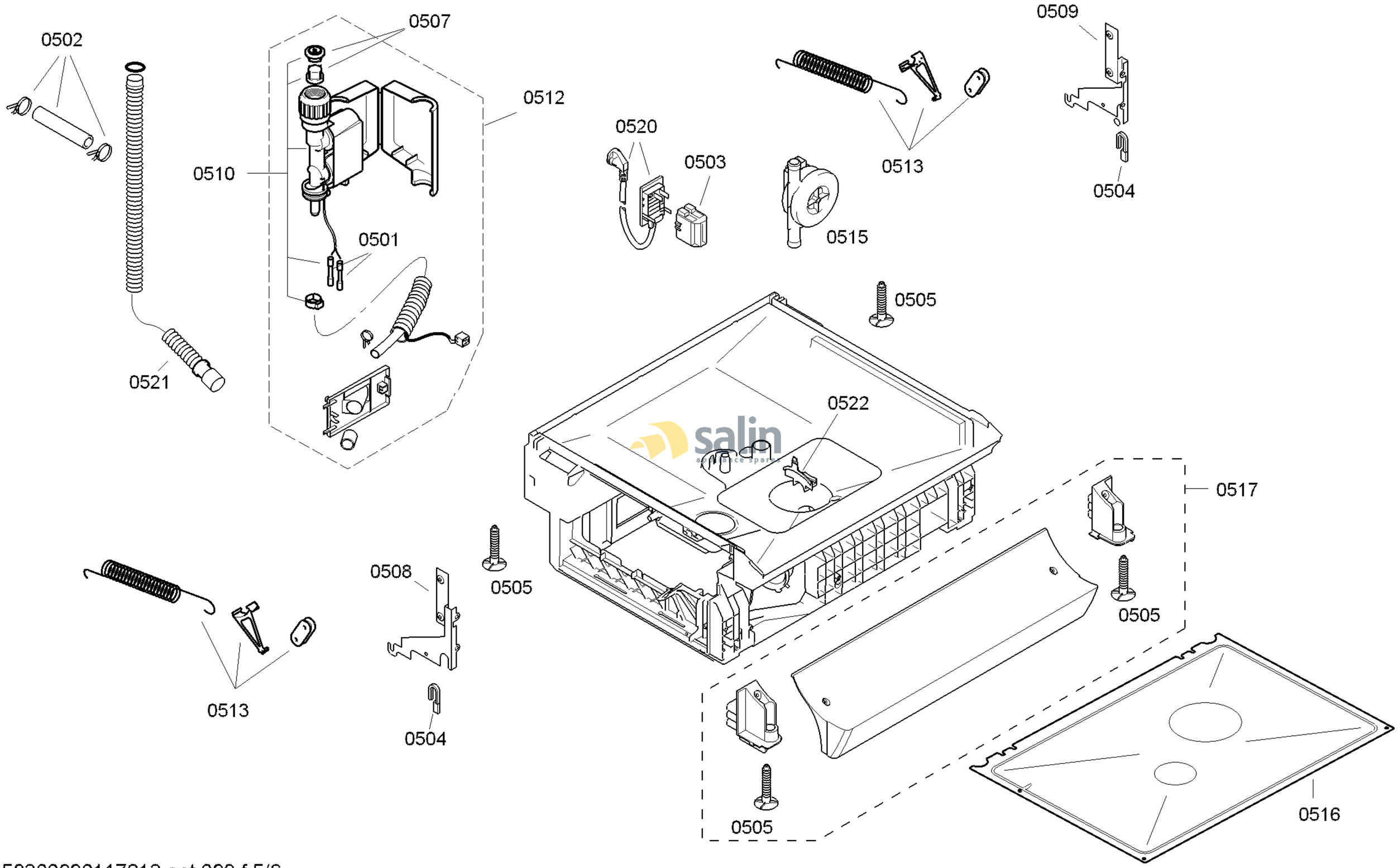

58300000117213 aet 000 f 5/6

FAMILY : SGS55E52EU
MODEL NO: SGS55E52EU/26
Check Position No/Part No or Replacement No

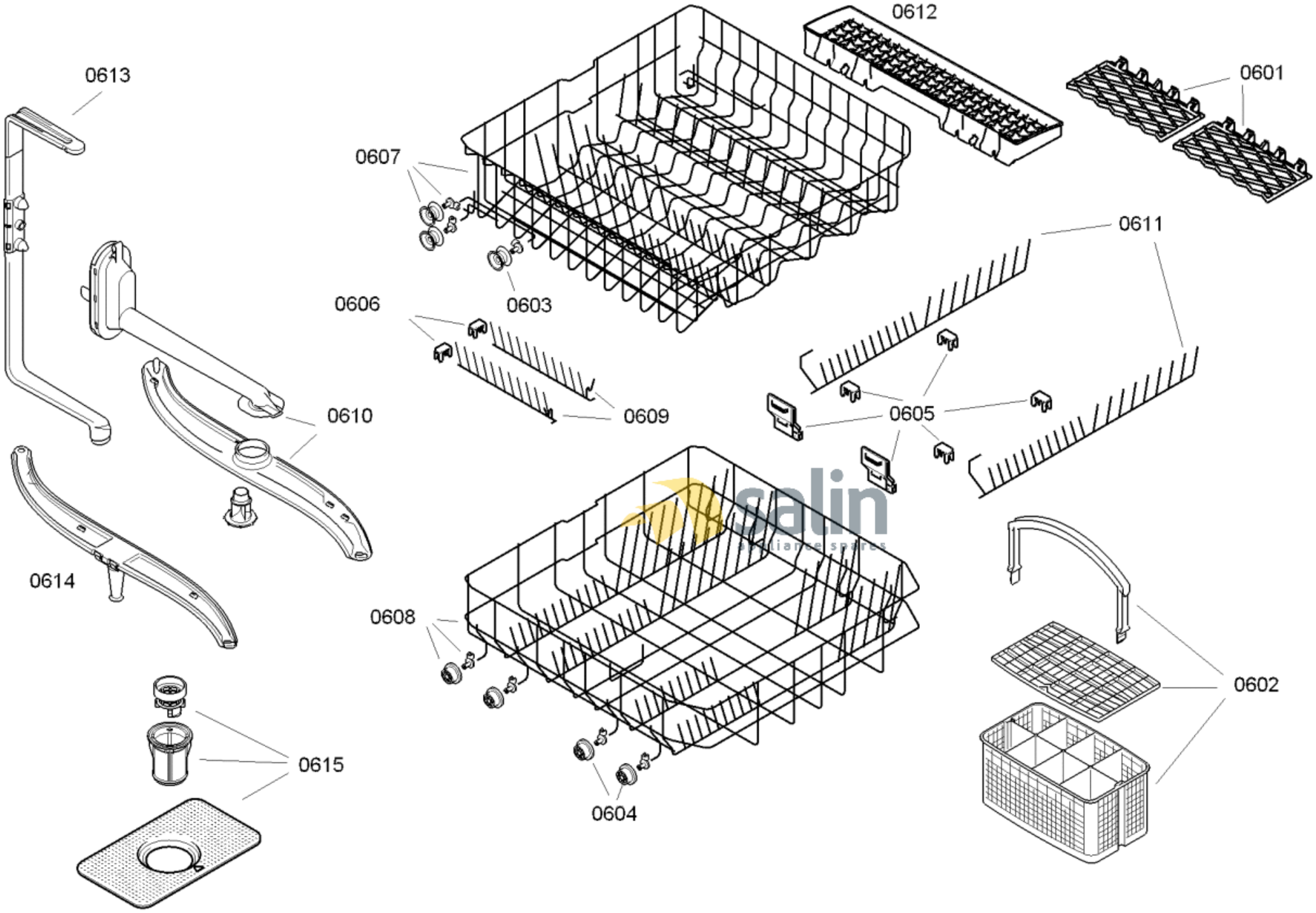

58300000117213 aet 000 f 6/6

FAMILY : SGS55E52EU

MODEL NO: SGS55E52EU/26

Check Position No/Part No or Replacement No