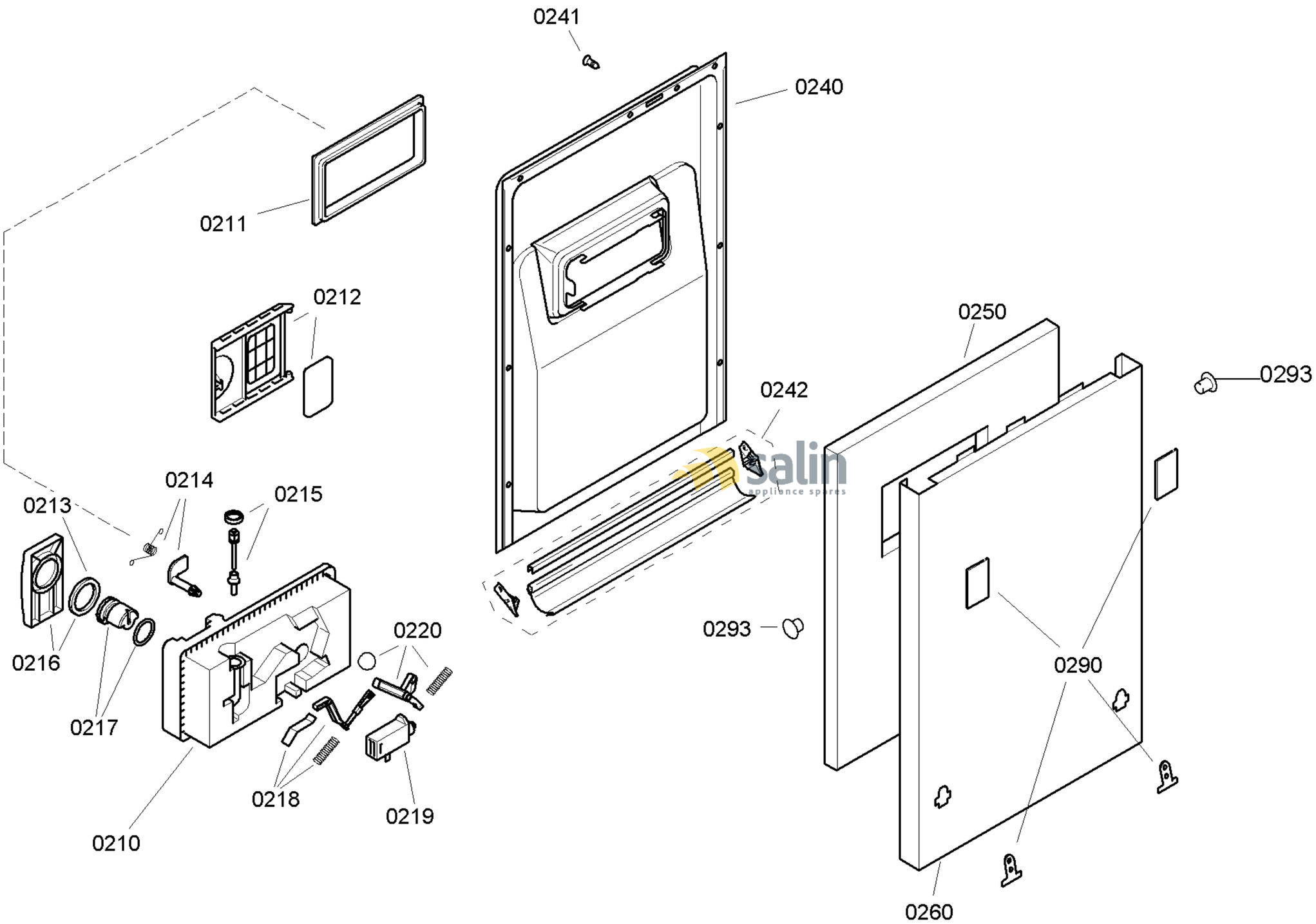

58300000116810 aet 000 d 2/6

FAMILY : SRI45T15EU
MODEL NO: SRI45T15EU/02
Check Position No/Part No or Replacement No

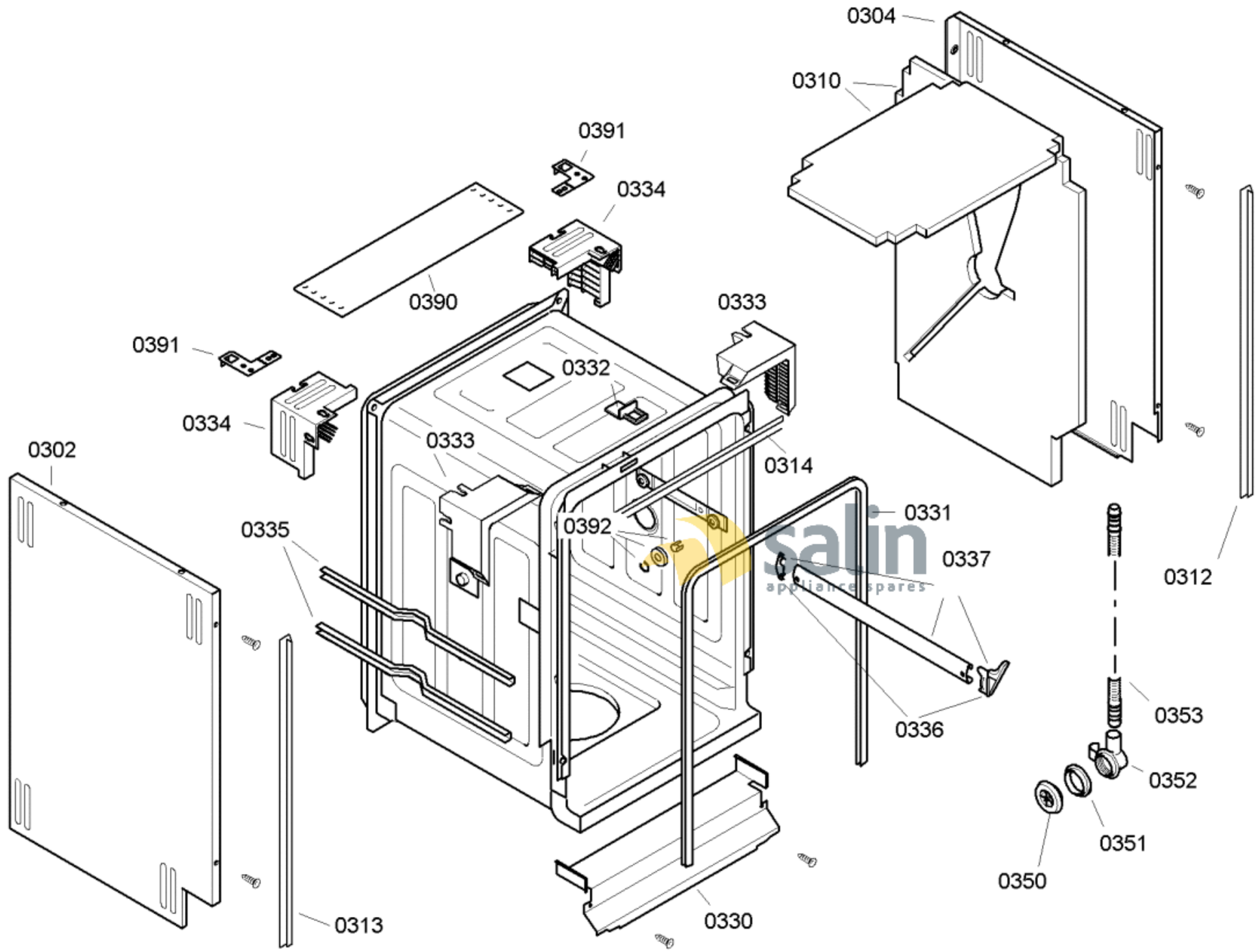

58300000116810 aet 000 d 3/6

FAMILY : SRI45T15EU

MODEL NO: SRI45T15EU/02

Check Position No/Part No or Replacement No

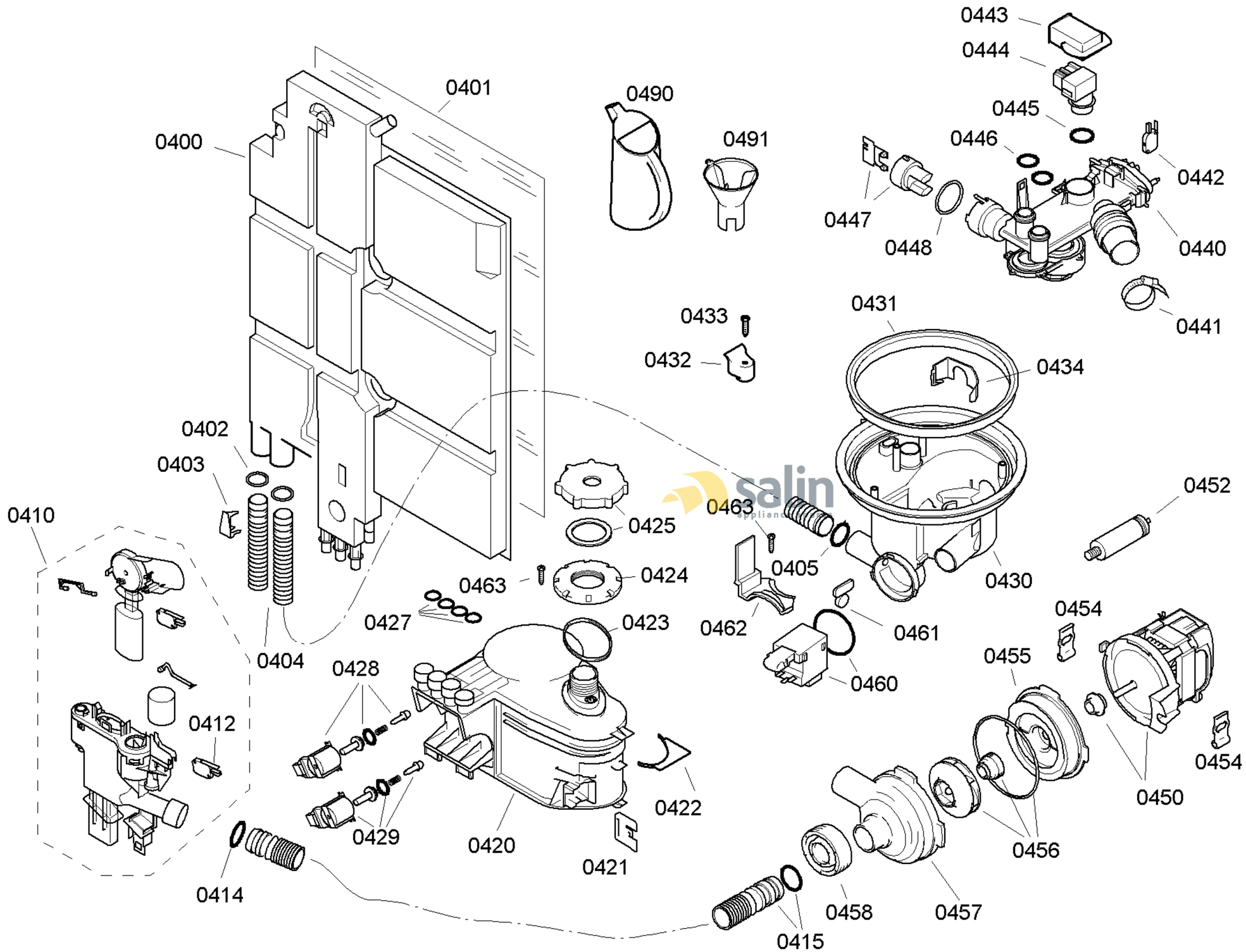

58300000116810 aet 000 d 4/6

FAMILY : SRI45T15EU
MODEL NO: SRI45T15EU/02
Check Position No/Part No or Replacement No

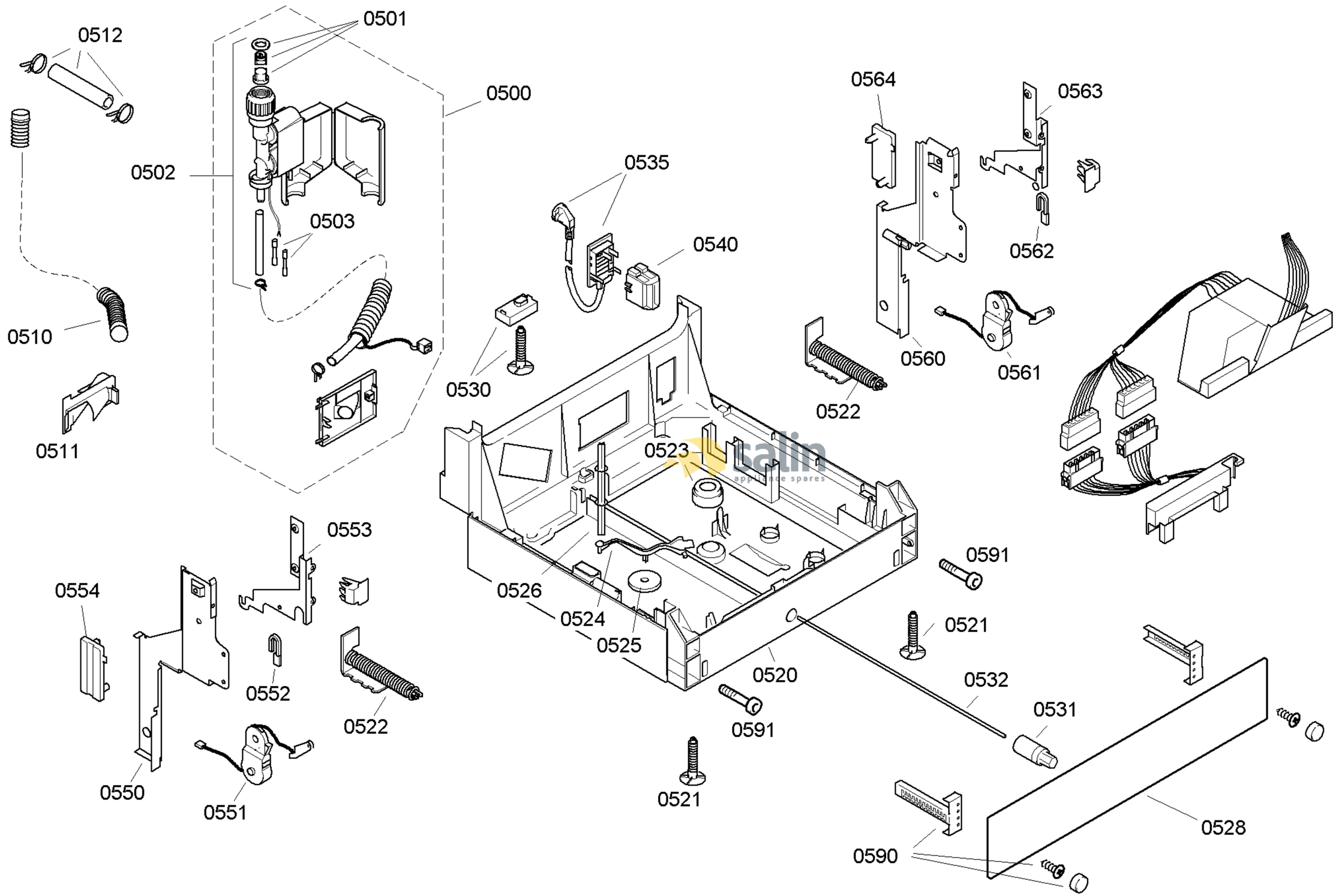

58300000116810 aet 000 d 5/6

FAMILY : SRI45T15EU
MODEL NO: SRI45T15EU/02
Check Position No/Part No or Replacement No

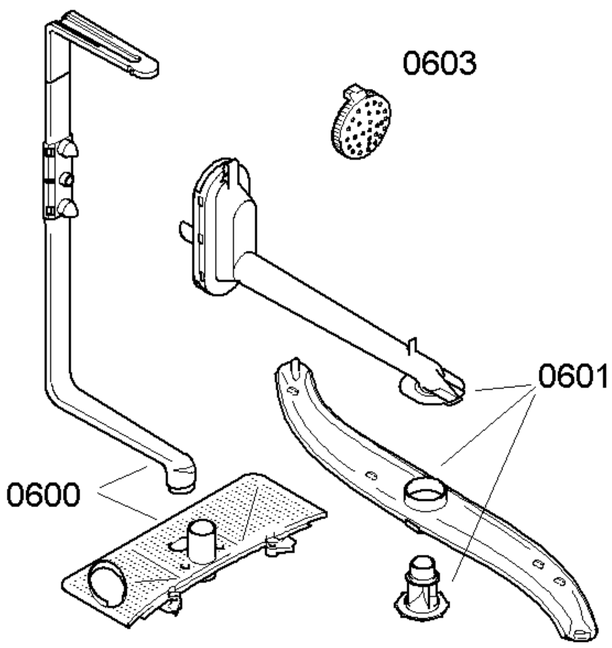

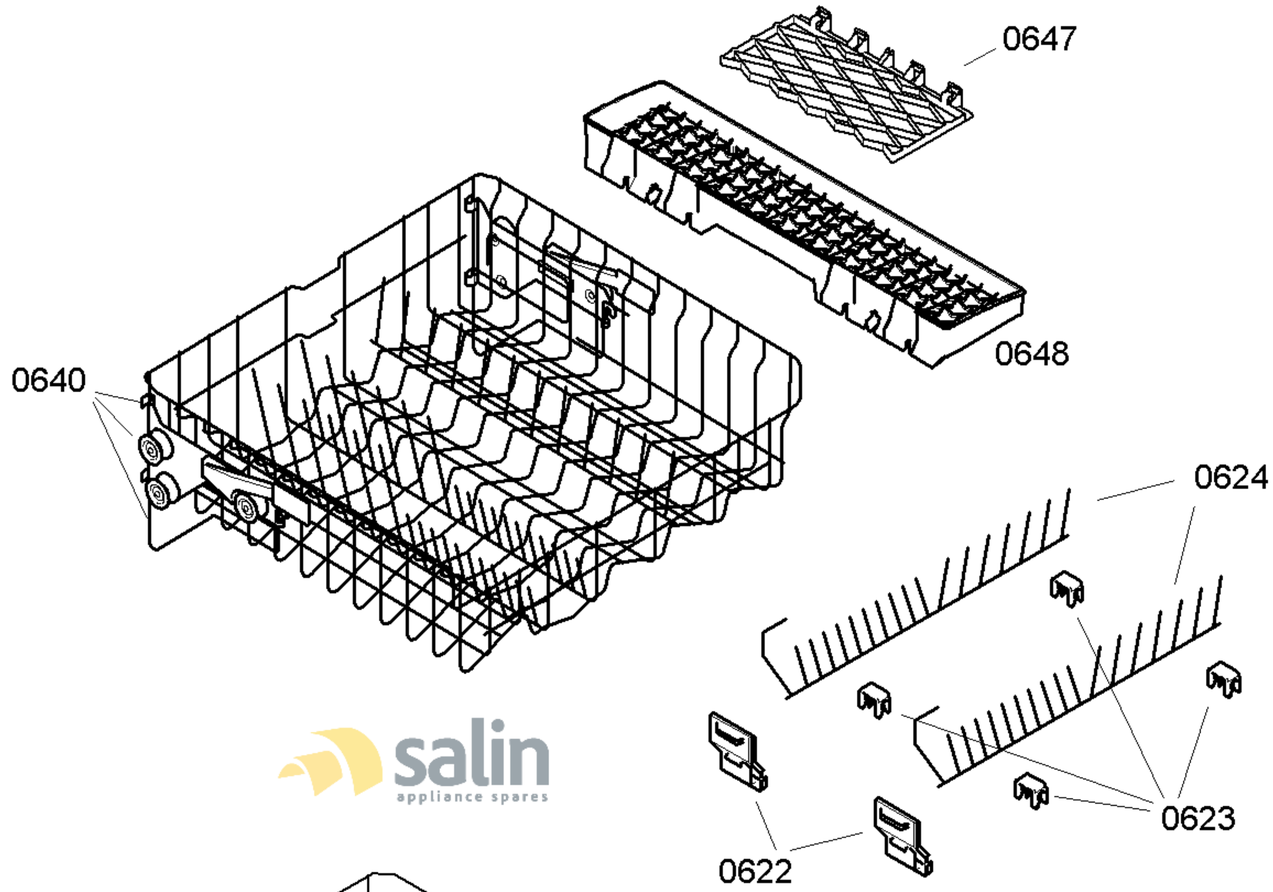

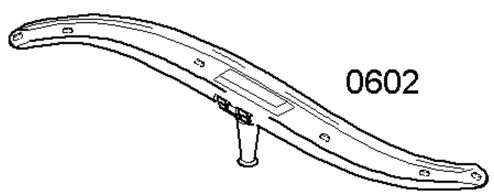

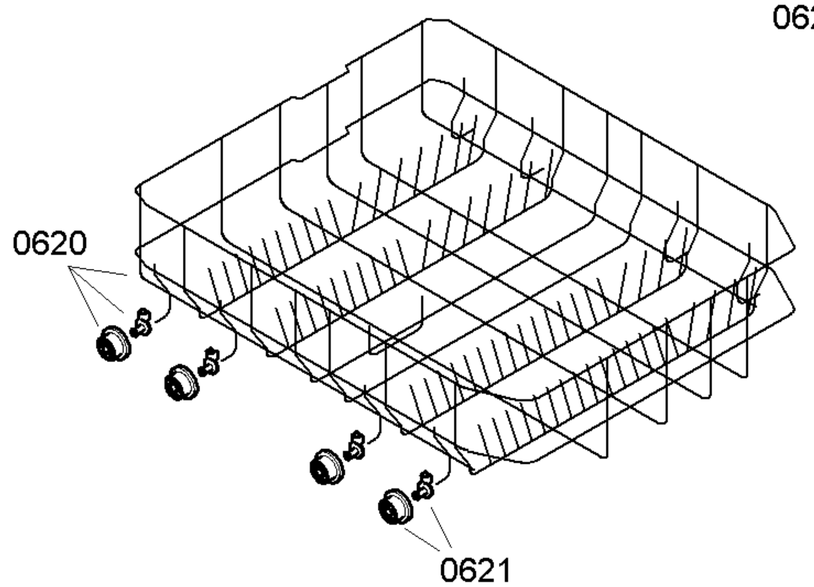

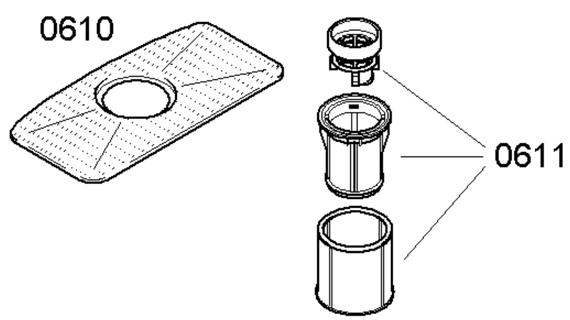

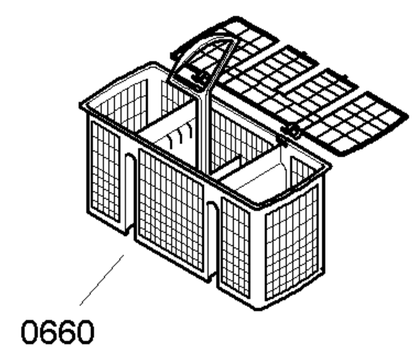

salin
appliance spares

58300000116810 aet 000 d 6/6

FAMILY : SRI45T15EU
MODEL NO: SRI45T15EU/02
Check Position No/Part No or Replacement No