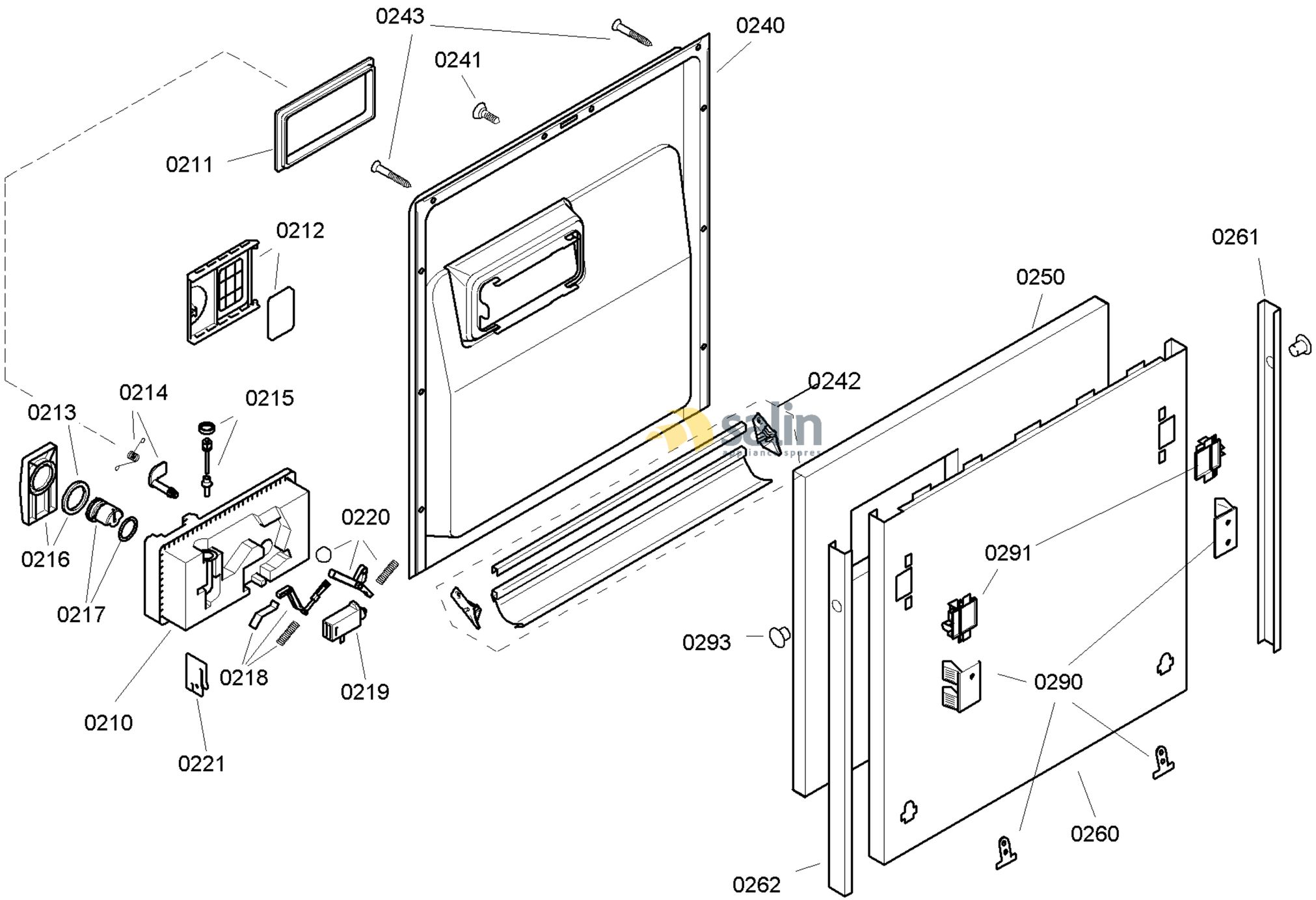

58300000113246 aet 000 b 2/6

FAMILY : SGV55M03AU
MODEL NO: SGV55M03AU/65
Check Position No/Part No or Replacement No

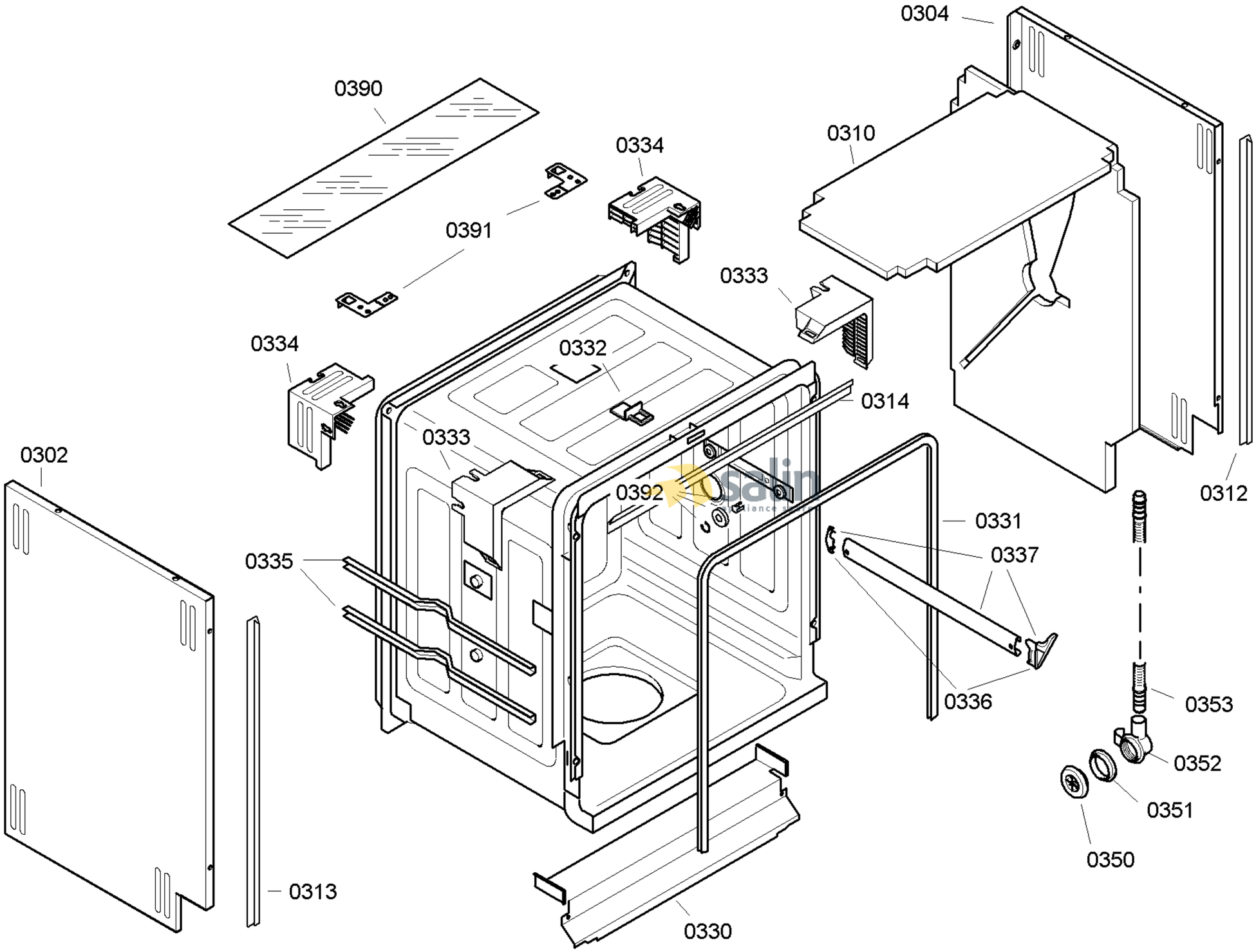

58300000113246 aet 000 b 3/6

FAMILY : SGV55M03AU
MODEL NO: SGV55M03AU/65
Check Position No/Part No or Replacement No

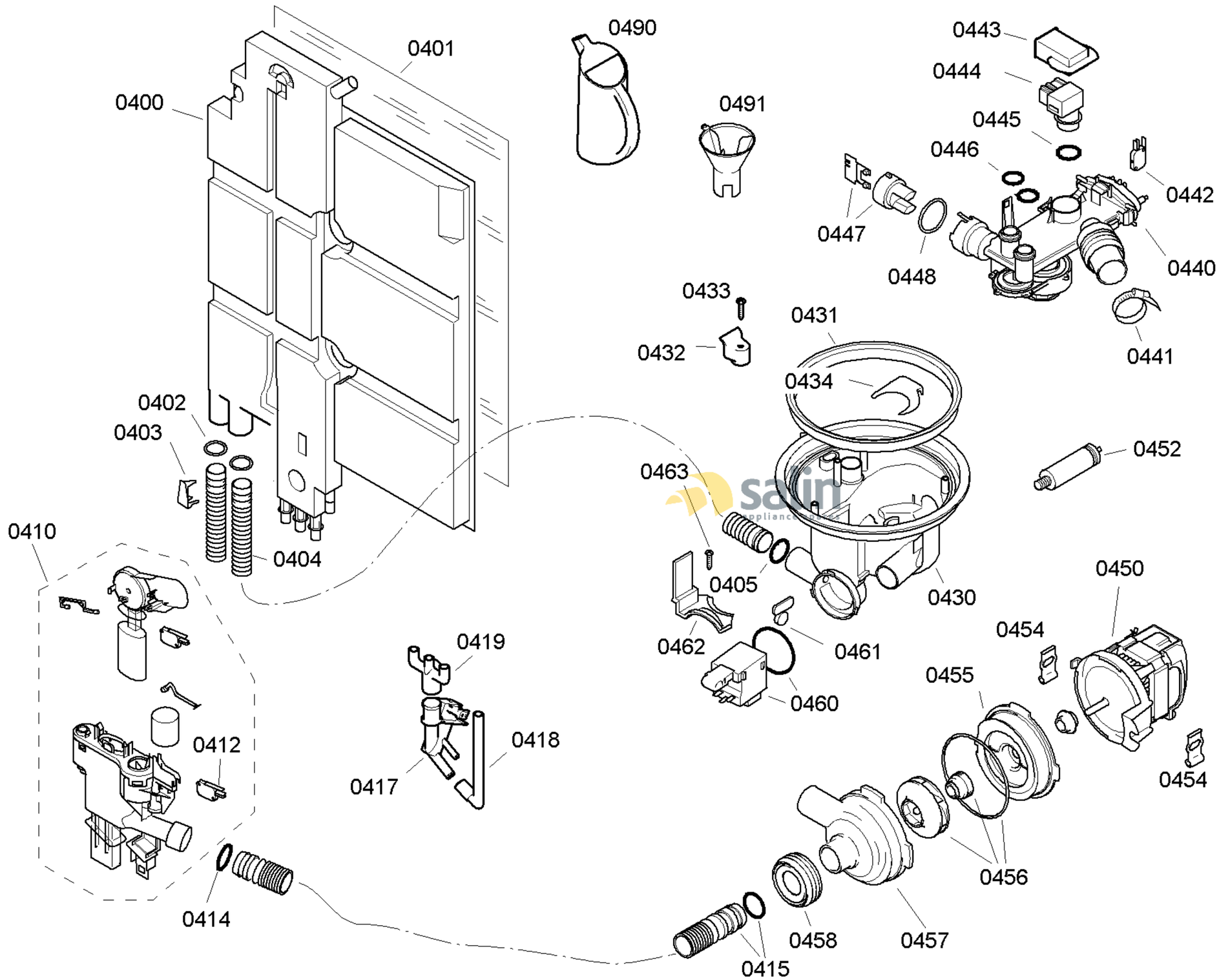

58300000113246 aet 000 b 4/6

FAMILY : SGV55M03AU
MODEL NO: SGV55M03AU/65
Check Position No/Part No or Replacement No

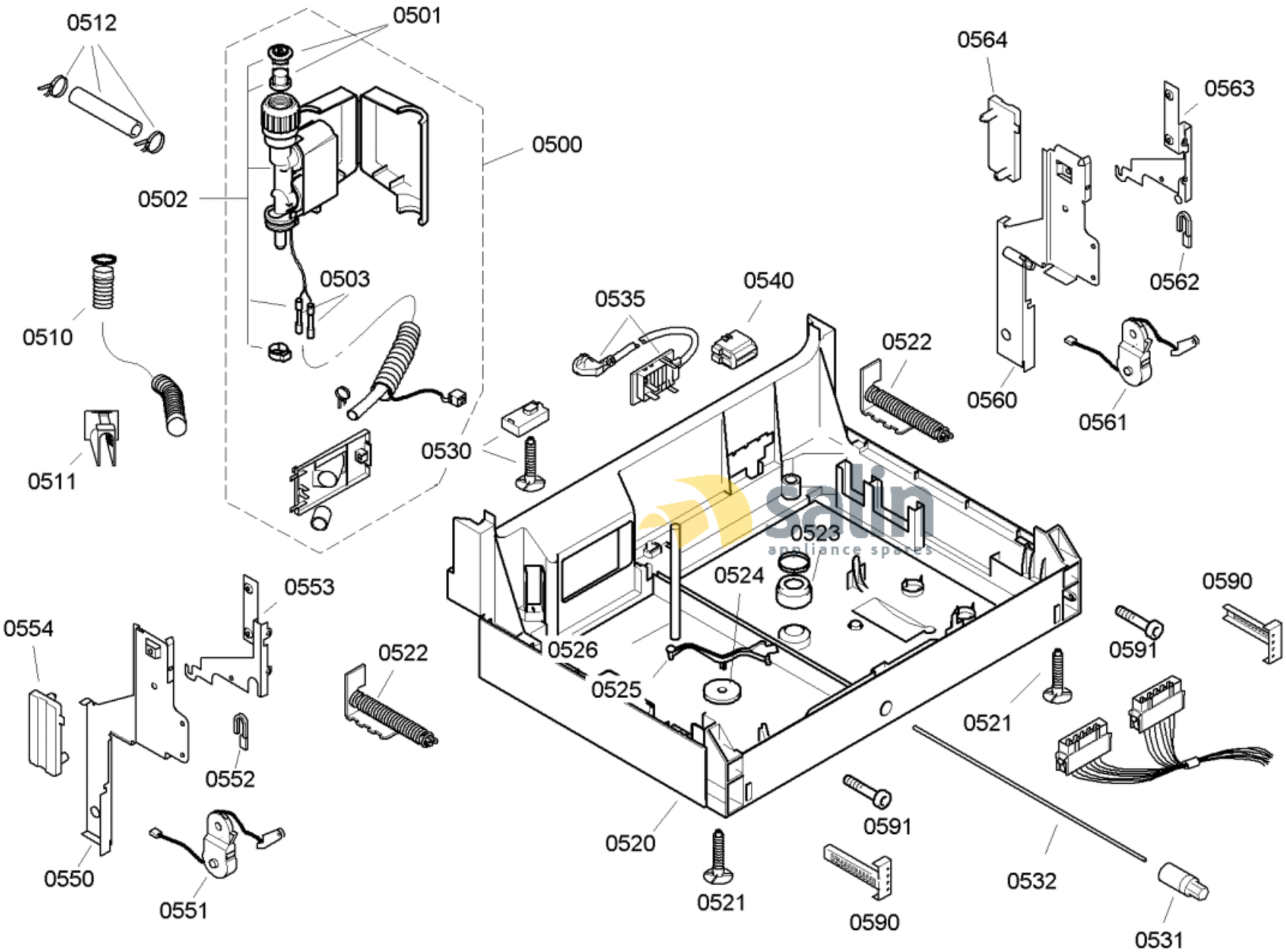

58300000113246 aet 000 b 5/6

FAMILY : SGV55M03AU

MODEL NO: SGV55M03AU/65

Check Position No/Part No or Replacement No

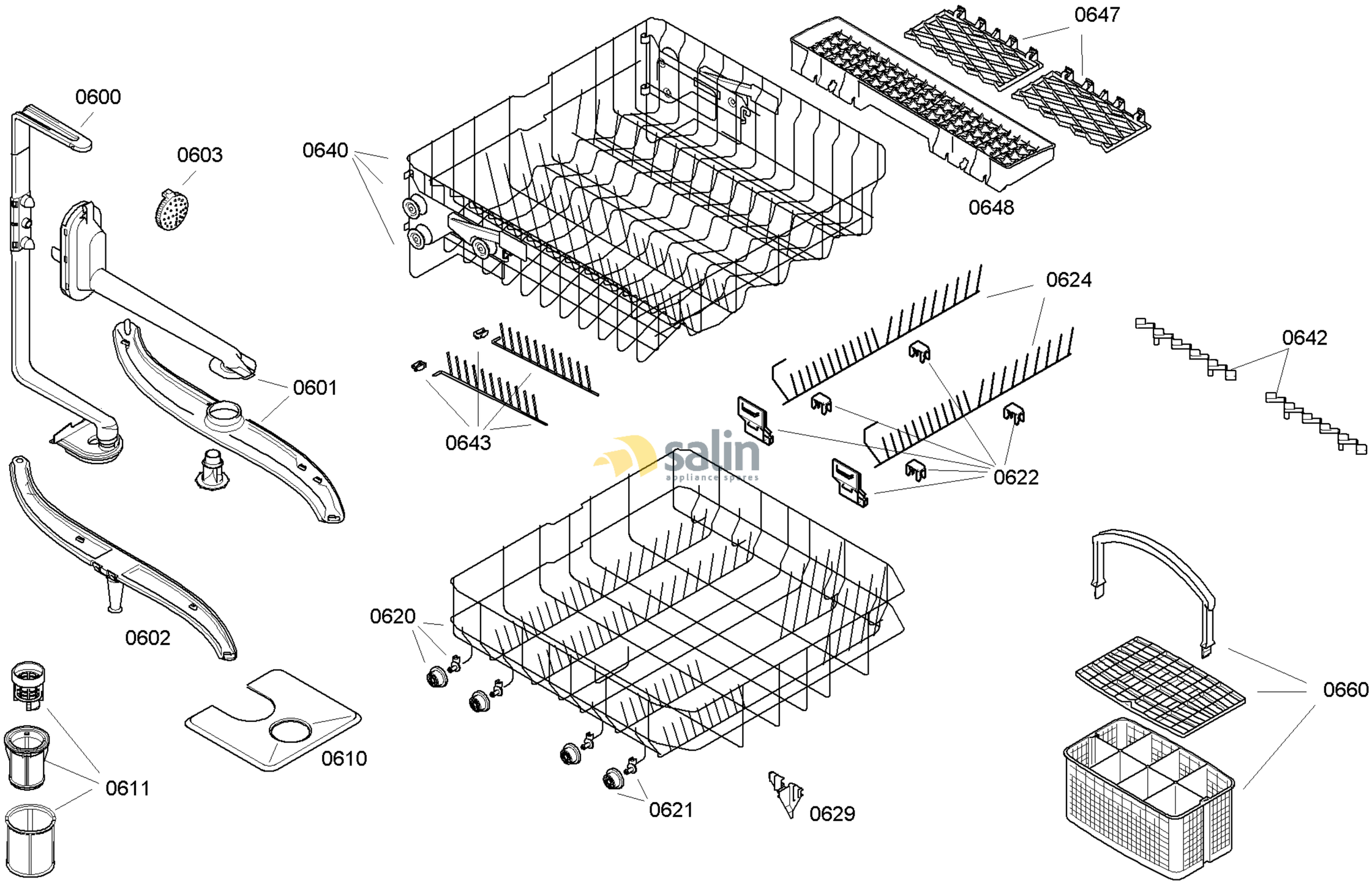

58300000113246 aet 000 b 6/6

FAMILY : SGV55M03AU
MODEL NO: SGV55M03AU/65
Check Position No/Part No or Replacement No