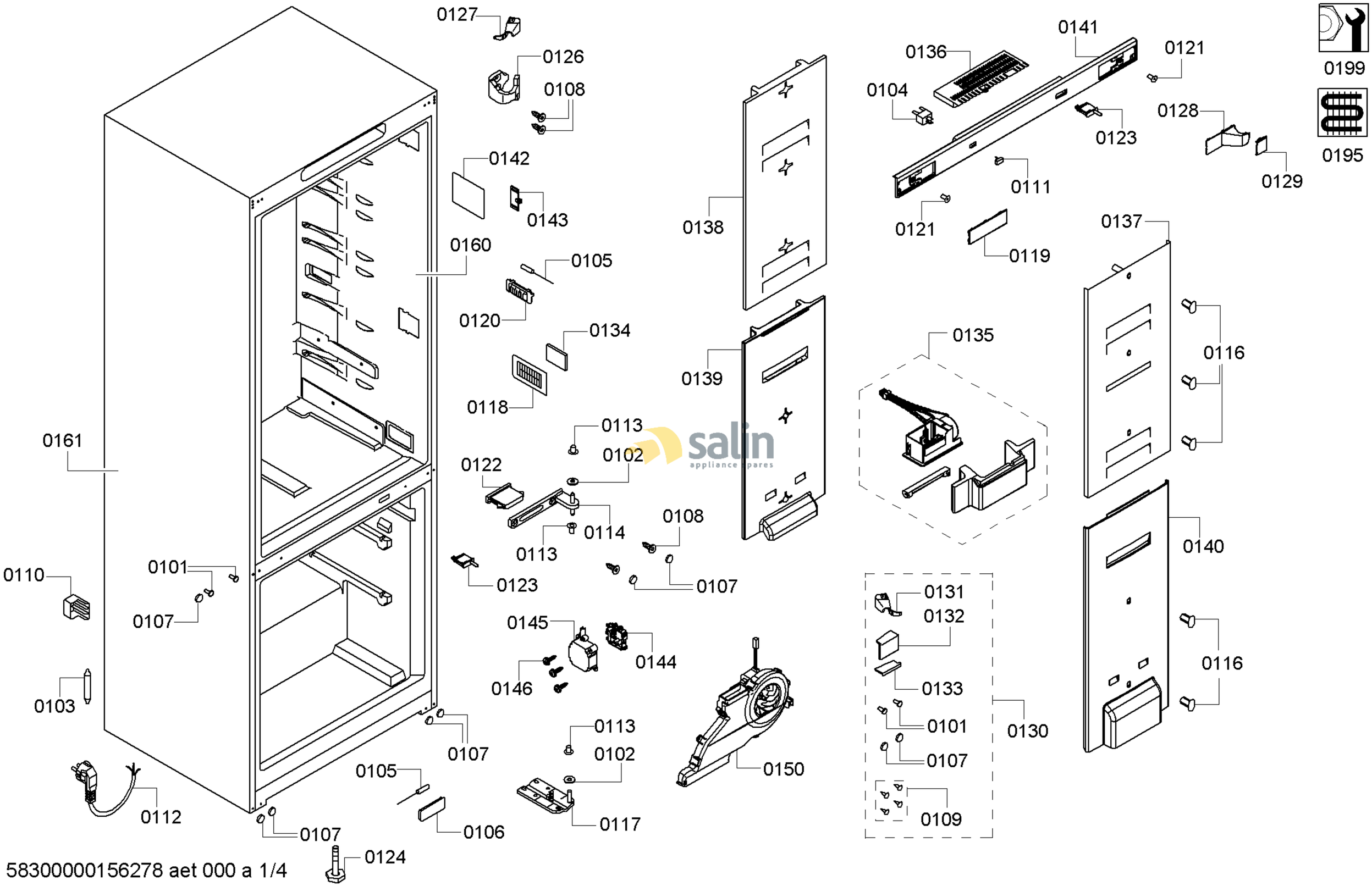

58300000156278 aet 000 a 1/4

FAMILY : KGN49H10
MODEL NO: KGN49H10/05
Check Position No/Part No or Replacement No

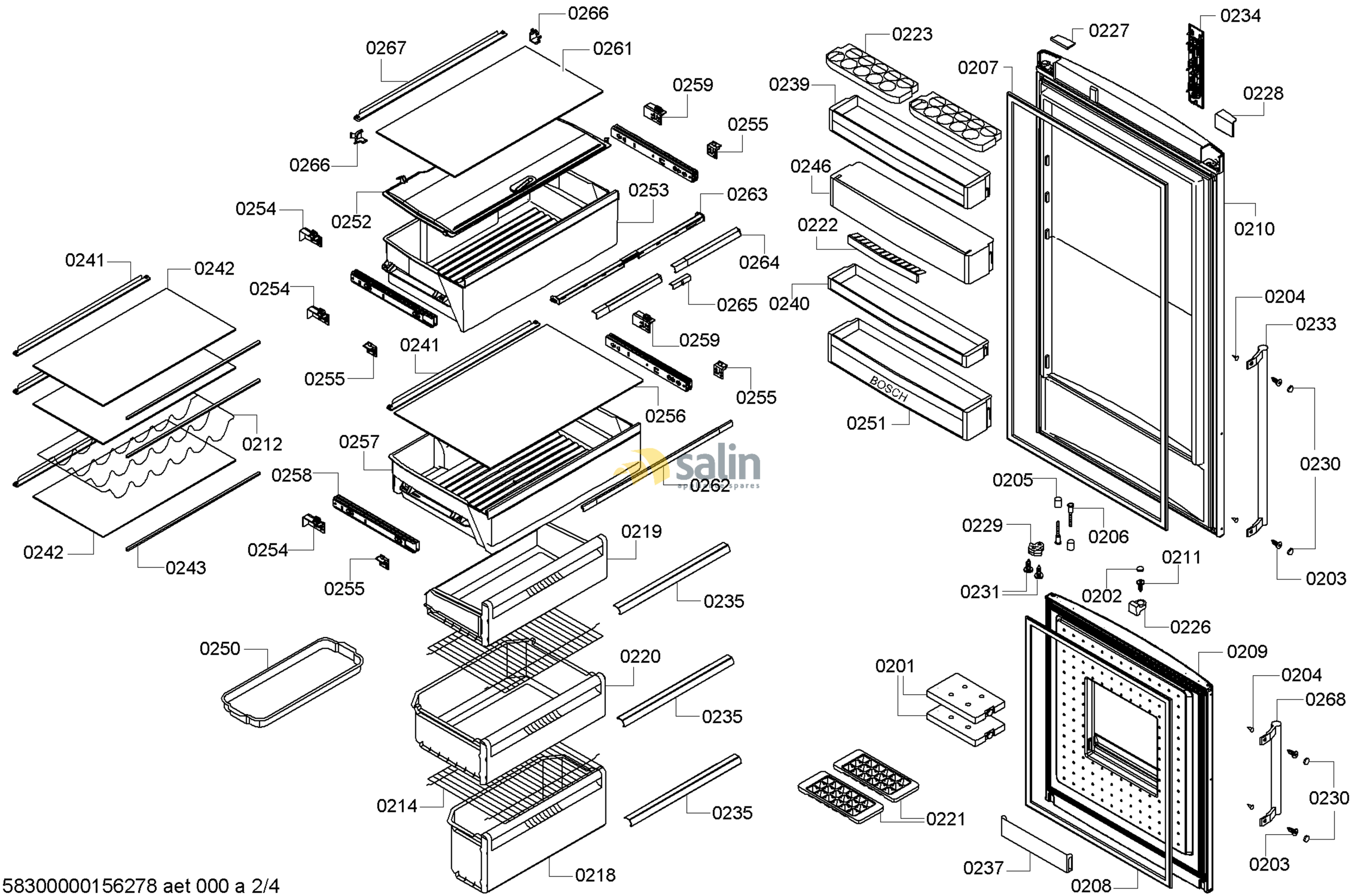

58300000156278 aet 000 a 2/4

FAMILY : KGN49H10

MODEL NO: KGN49H10/05

Check Position No/Part No or Replacement No

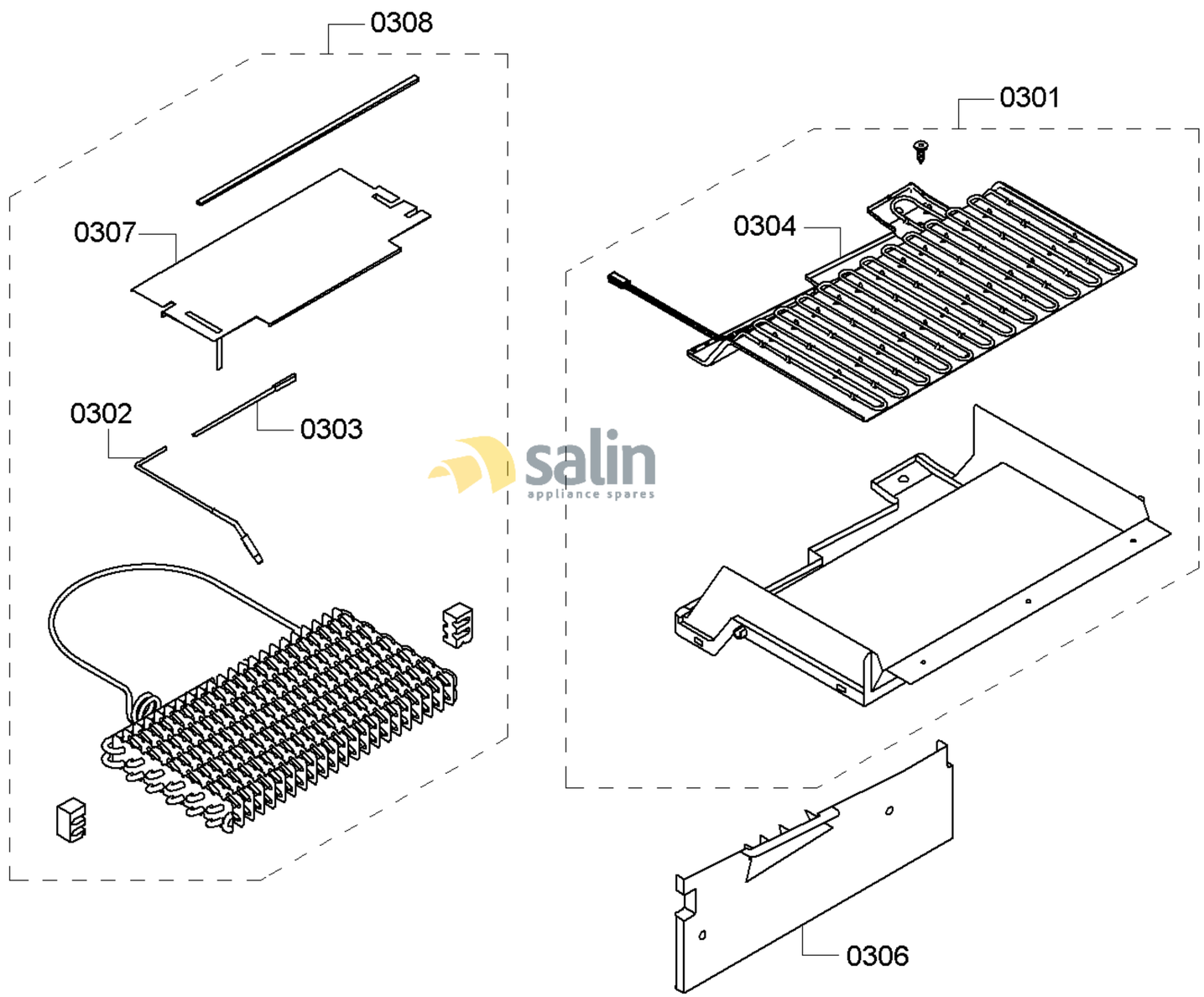

58300000156278 aet 000 a 3/4

FAMILY : KGN49H10
MODEL NO: KGN49H10/05
Check Position No/Part No or Replacement No