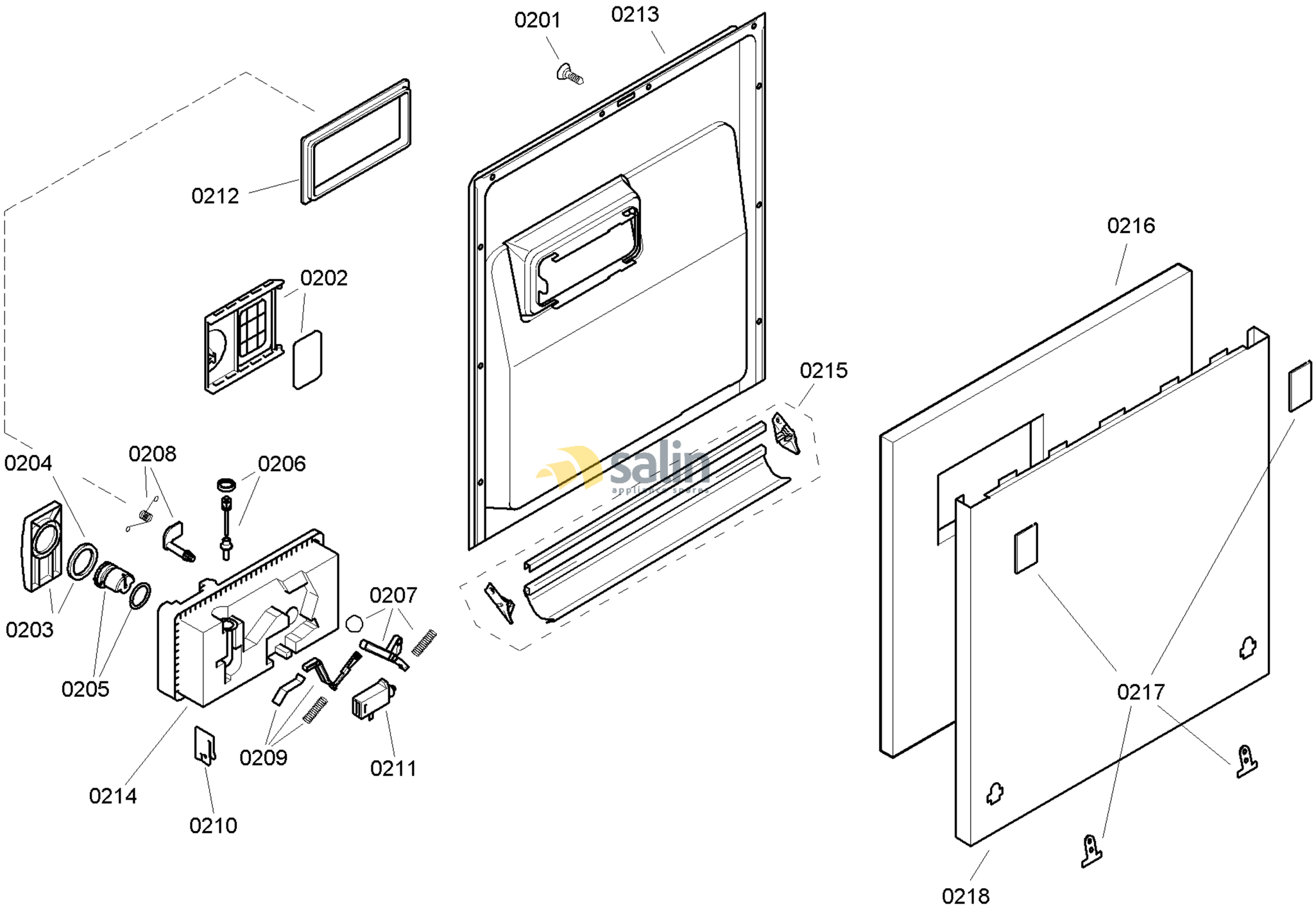


58300000120914 aet 000 c 2/6

FAMILY : SGV43E93EU
MODEL NO: SGV43E93EU/26
Check Position No/Part No or Replacement No

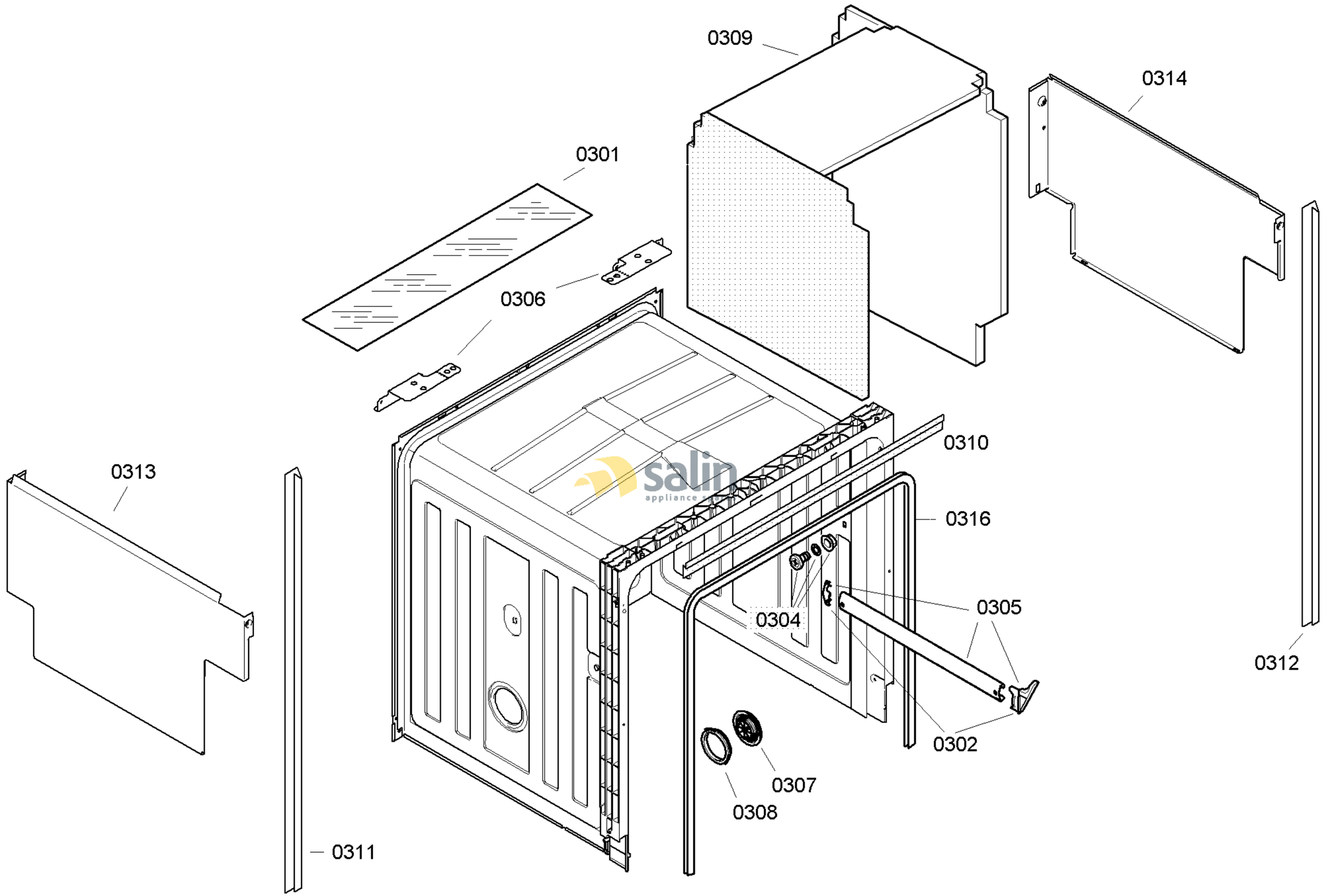


58300000120914 aet 000 c 3/6

FAMILY : SGV43E93EU
MODEL NO: SGV43E93EU/26
Check Position No/Part No or Replacement No

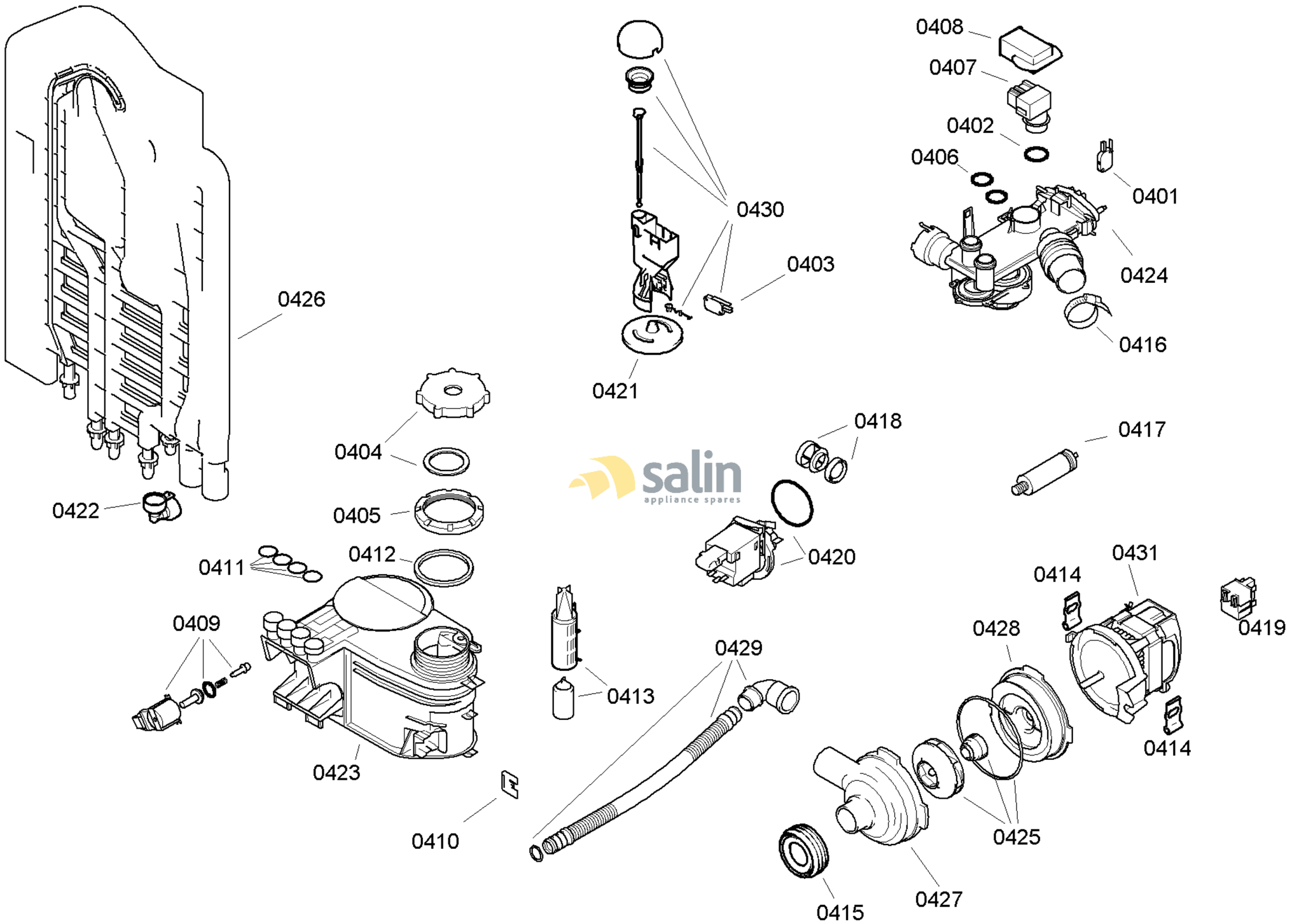


58300000120914 aet 000 c 4/6

FAMILY : SGV43E93EU
MODEL NO: SGV43E93EU/26
Check Position No/Part No or Replacement No

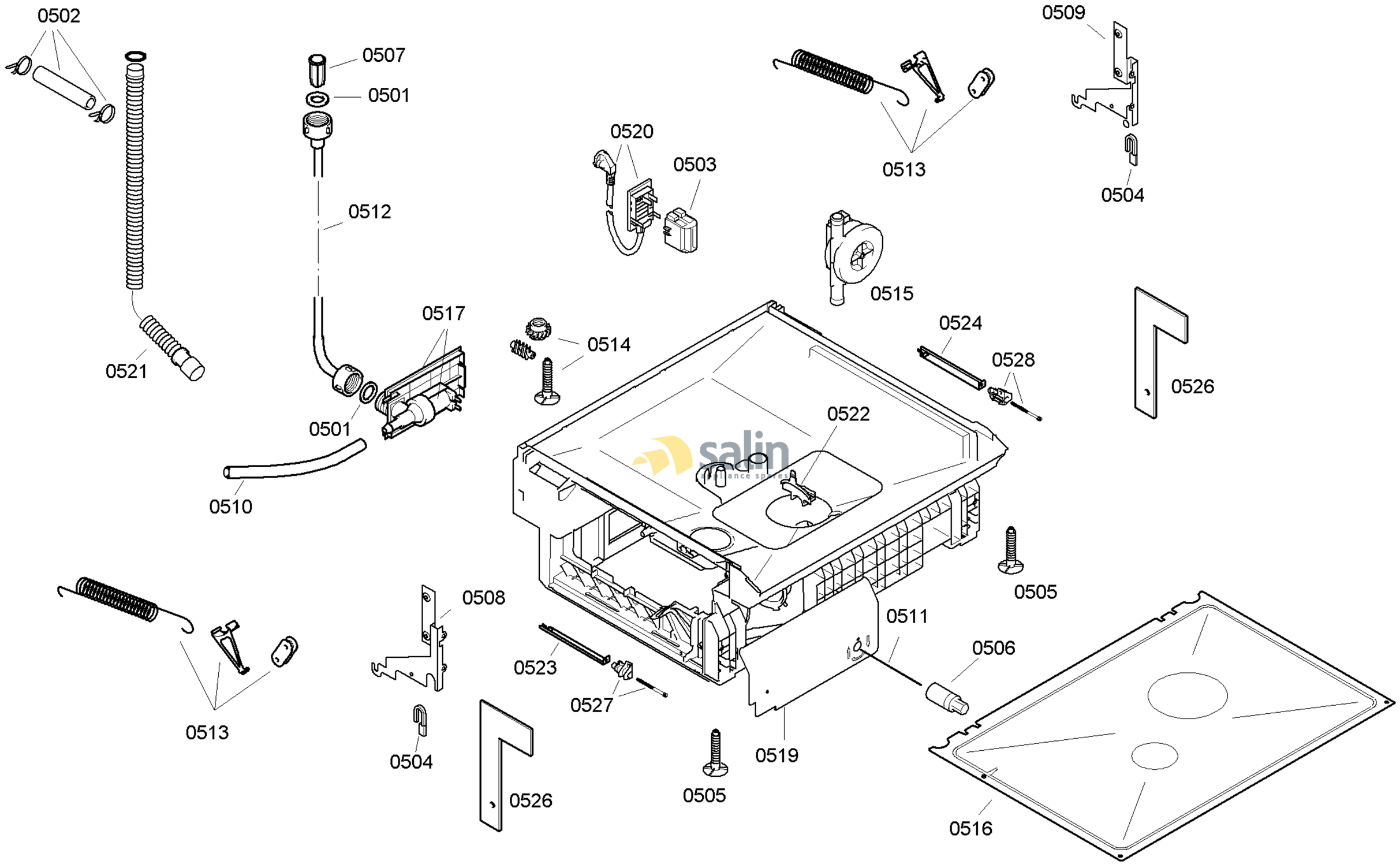


58300000120914 aet 000 c 5/6

FAMILY : SGV43E93EU
MODEL NO: SGV43E93EU/26
Check Position No/Part No or Replacement No

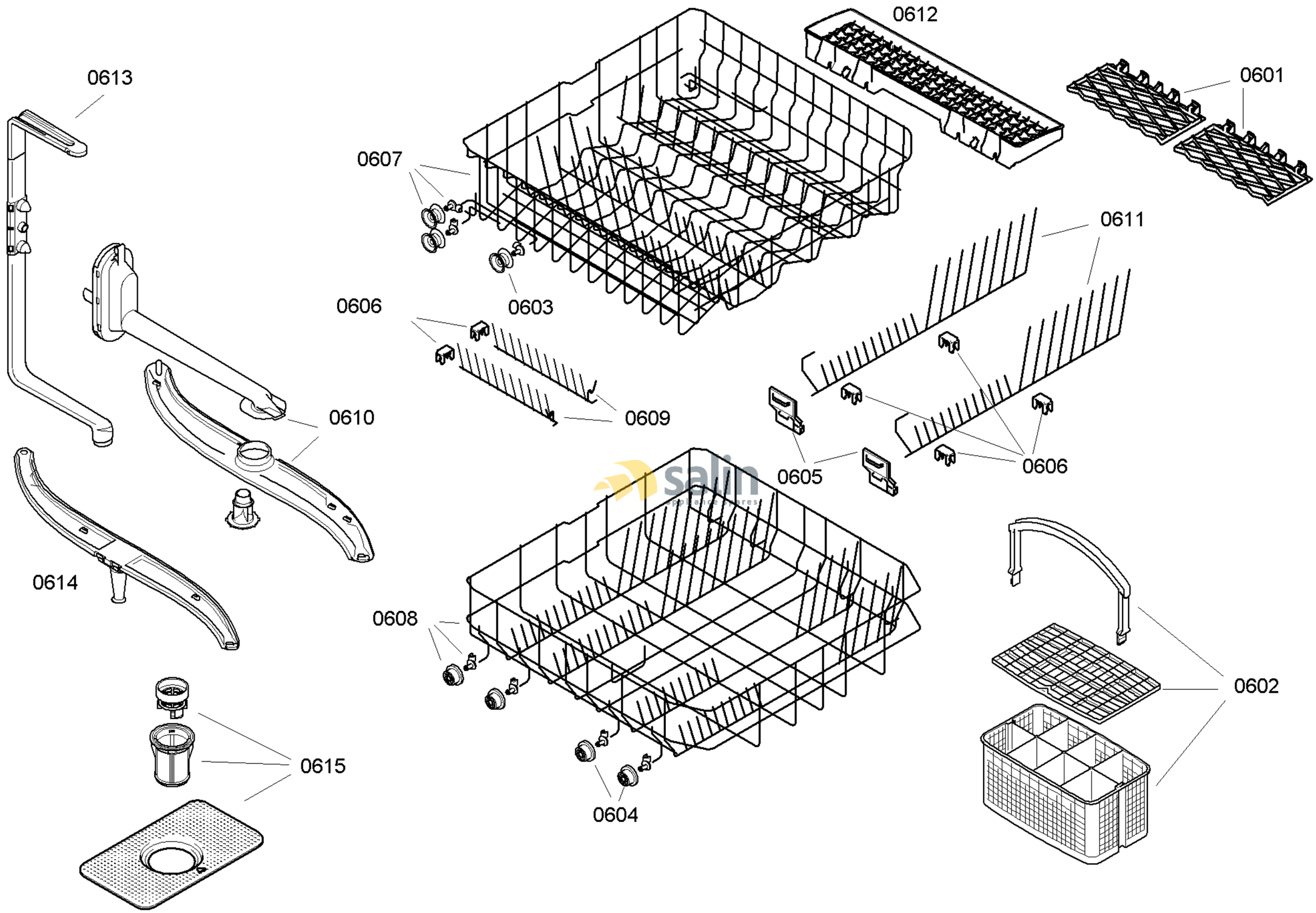


58300000120914 aet 000 c 6/6

FAMILY : SGV43E93EU
MODEL NO: SGV43E93EU/26
Check Position No/Part No or Replacement No