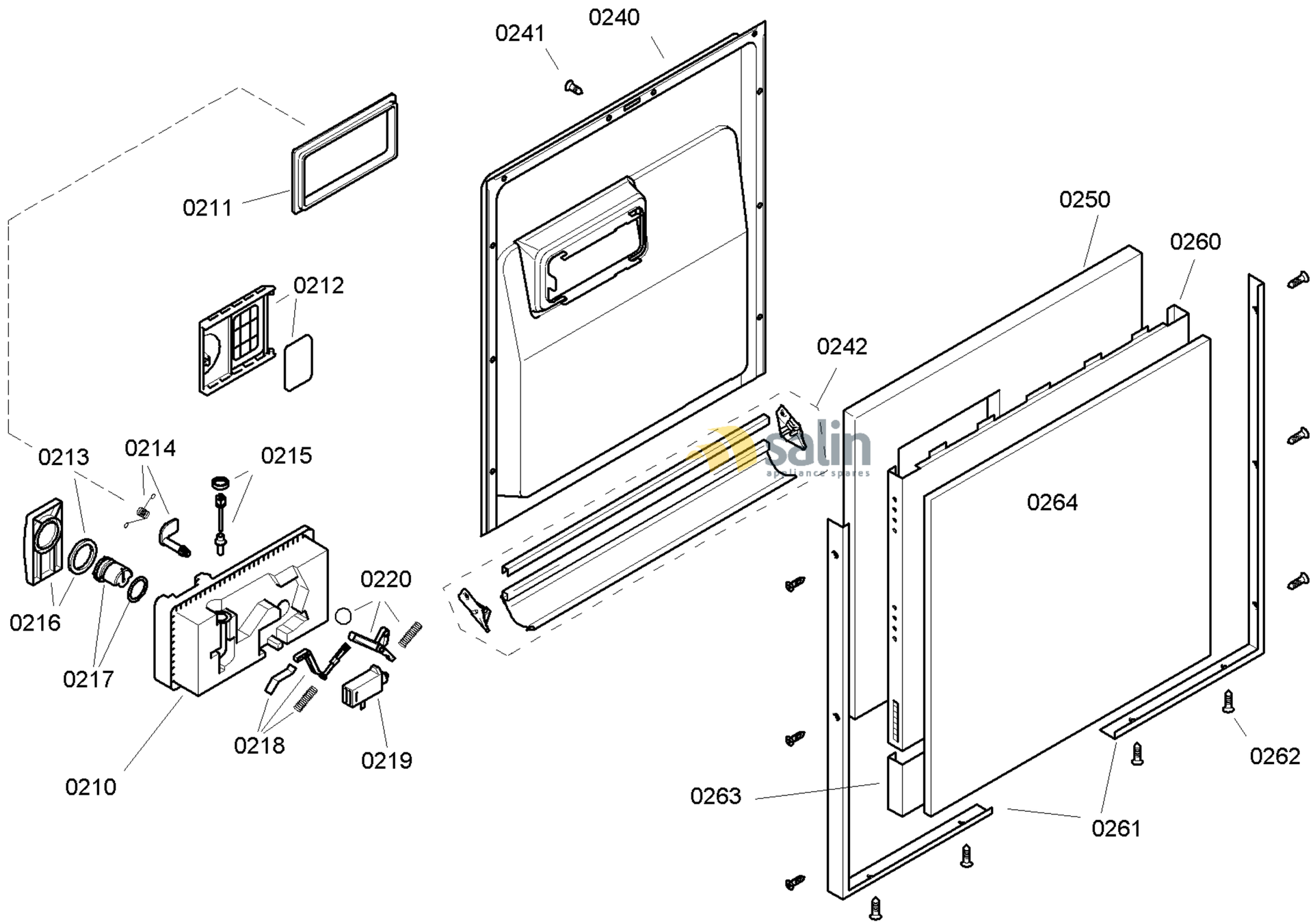

58300000109920 aet 000 c 2/6

FAMILY : SGU53E05AU
MODEL NO: SGU53E05AU/30
Check Position No/Part No or Replacement No

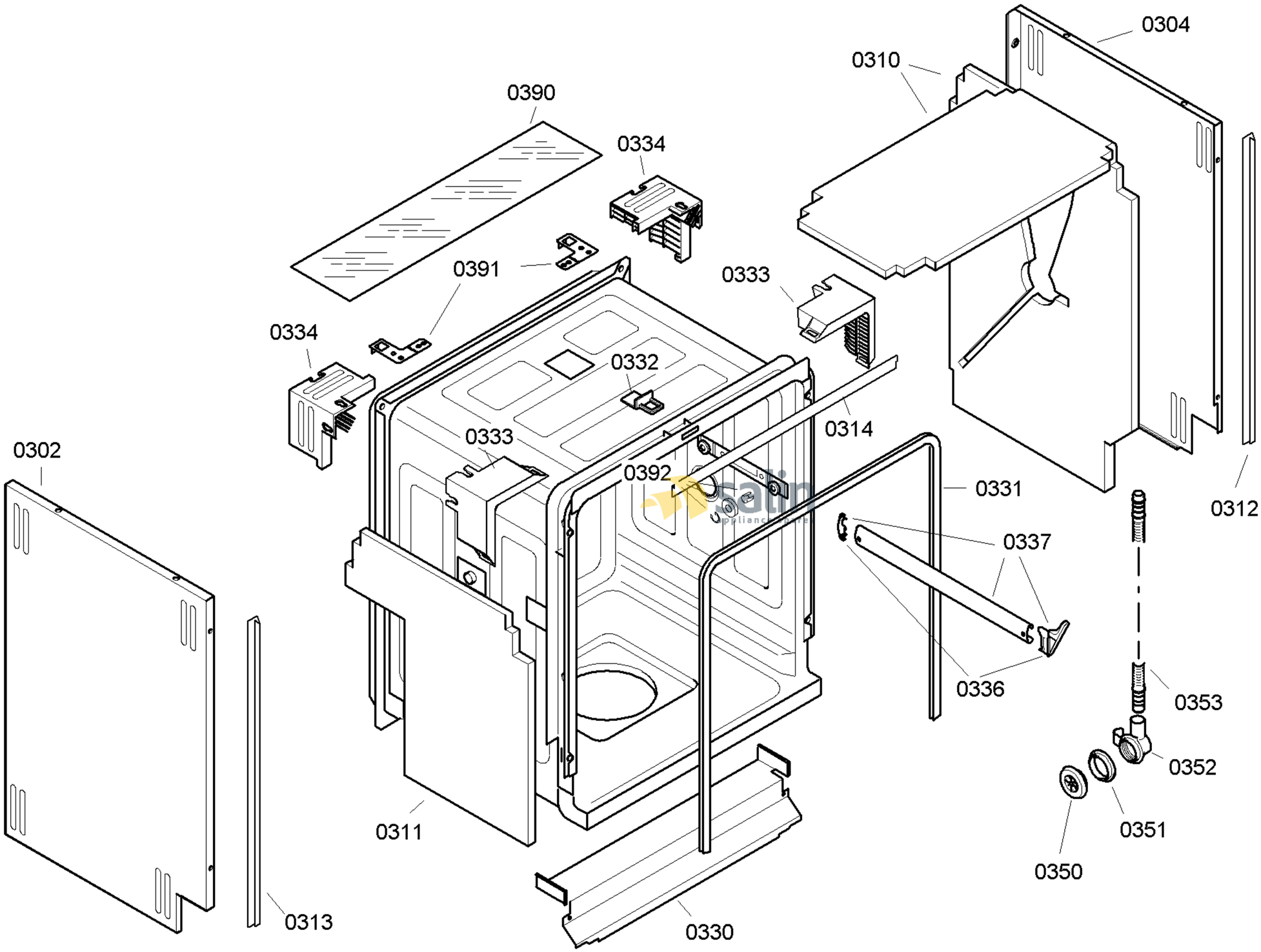

58300000109920 aet 000 c 3/6

FAMILY : SGU53E05AU
MODEL NO: SGU53E05AU/30
Check Position No/Part No or Replacement No

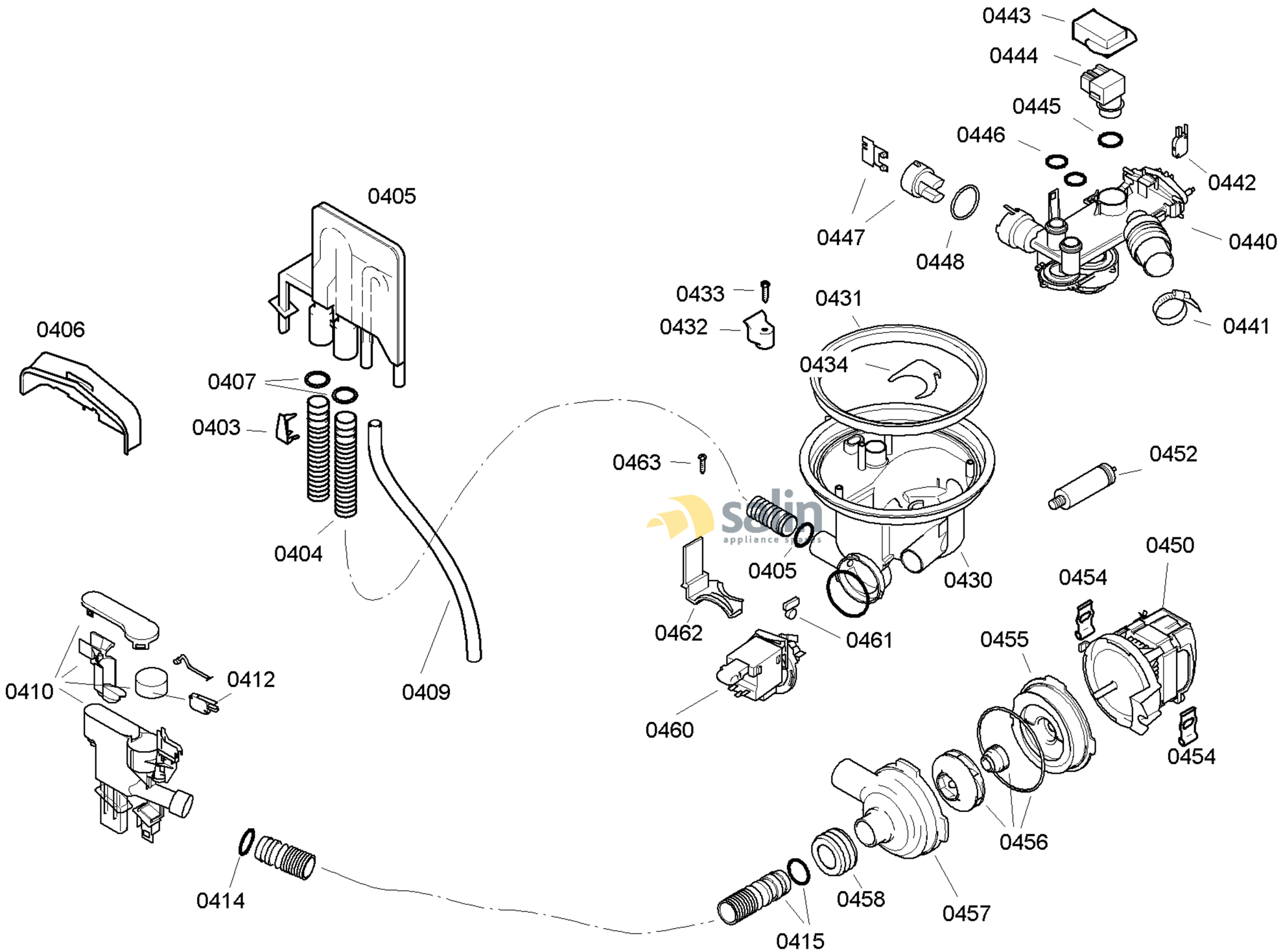

58300000109920 aet 000 c 4/6

FAMILY : SGU53E05AU
MODEL NO: SGU53E05AU/30
Check Position No/Part No or Replacement No

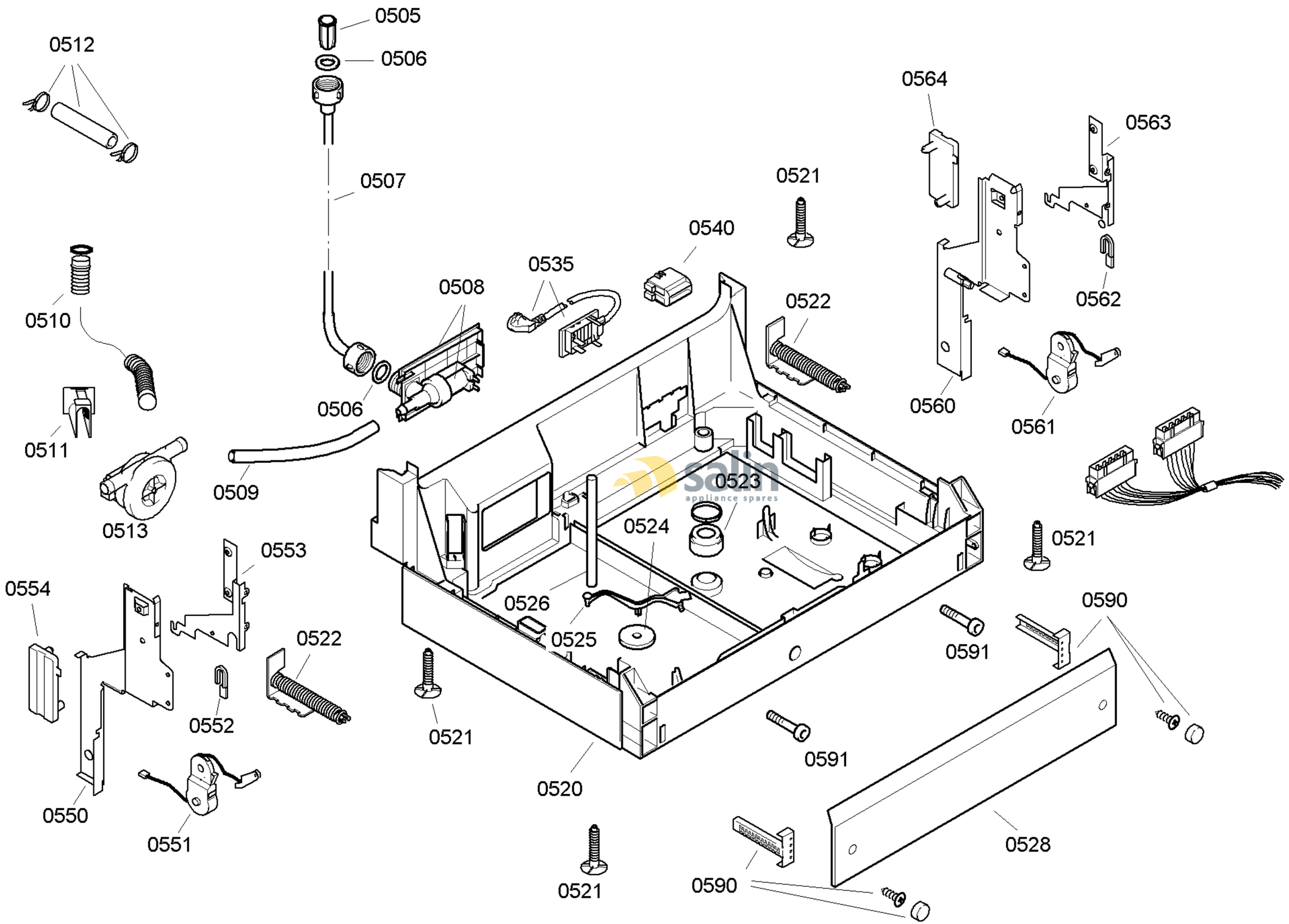

58300000109920 aet 000 c 5/6

FAMILY : SGU53E05AU
MODEL NO: SGU53E05AU/30
Check Position No/Part No or Replacement No

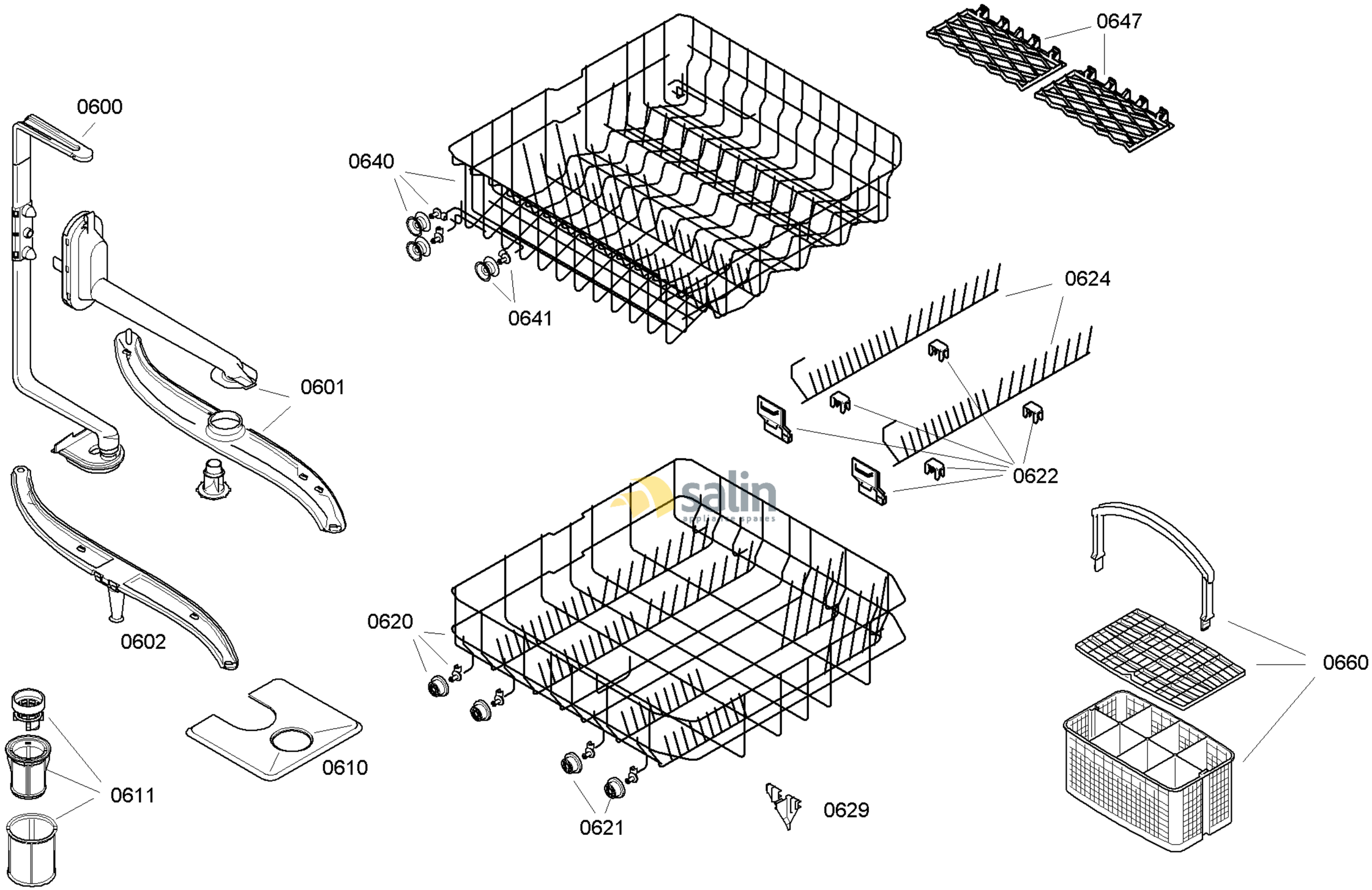

58300000109920 aet 000 c 6/6

FAMILY : SGU53E05AU
MODEL NO: SGU53E05AU/30
Check Position No/Part No or Replacement No