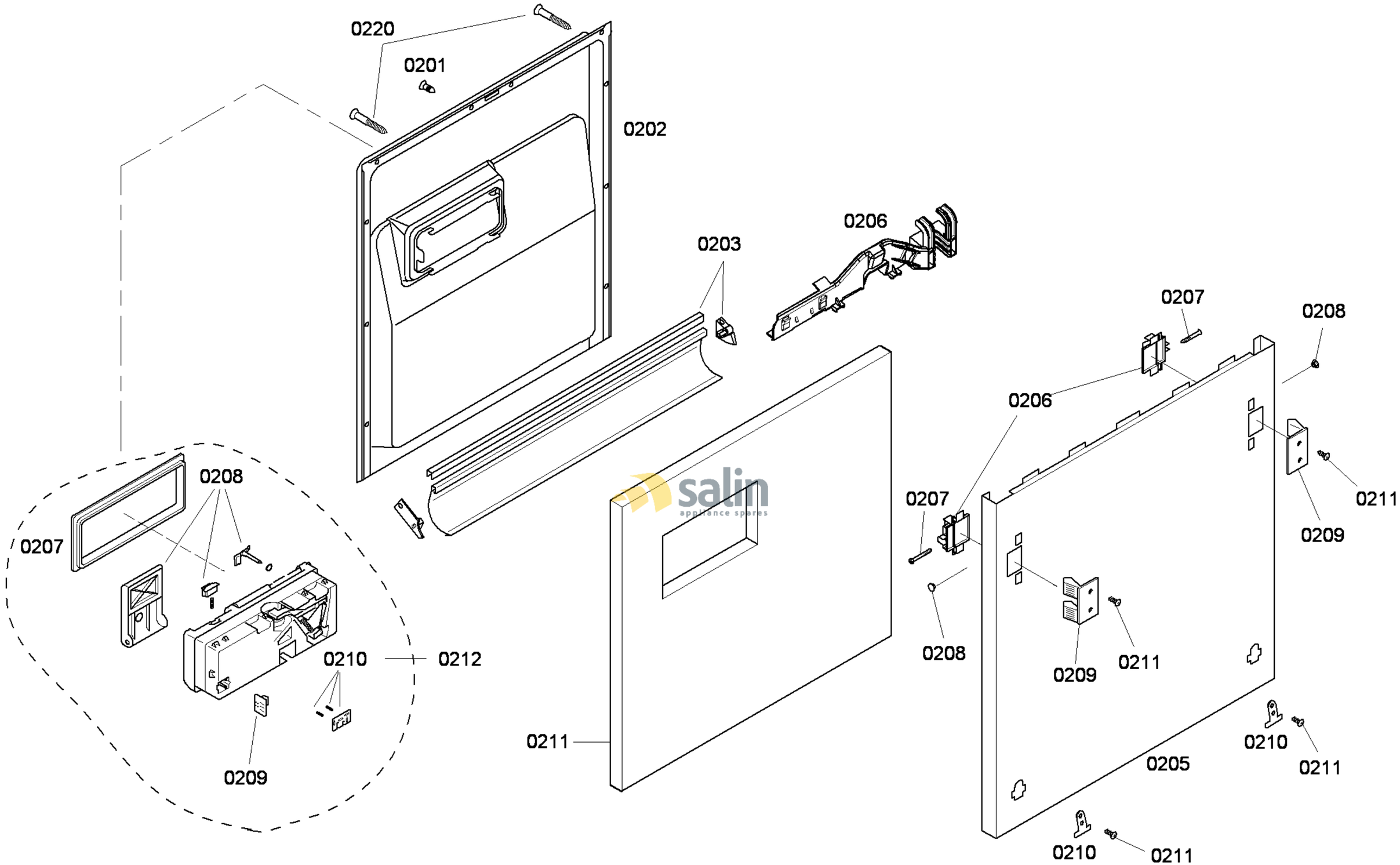

58300000128703 aet 000 c 2/6

FAMILY : SHI66A05UC
MODEL NO: SHI66A05UC/14
Check Position No/Part No or Replacement No

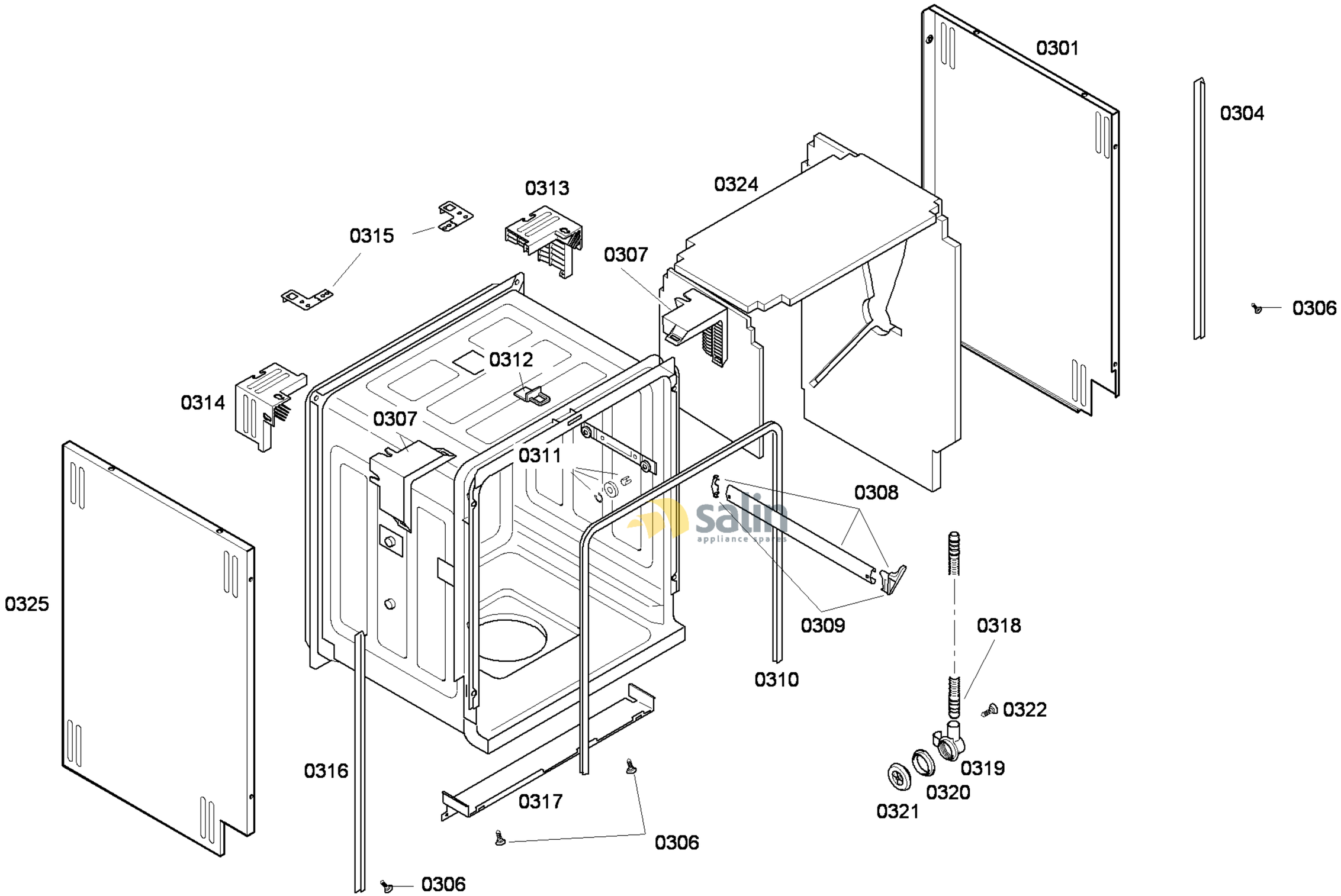

58300000128703 aet 000 c 3/6

FAMILY : SHI66A05UC
MODEL NO: SHI66A05UC/14
Check Position No/Part No or Replacement No

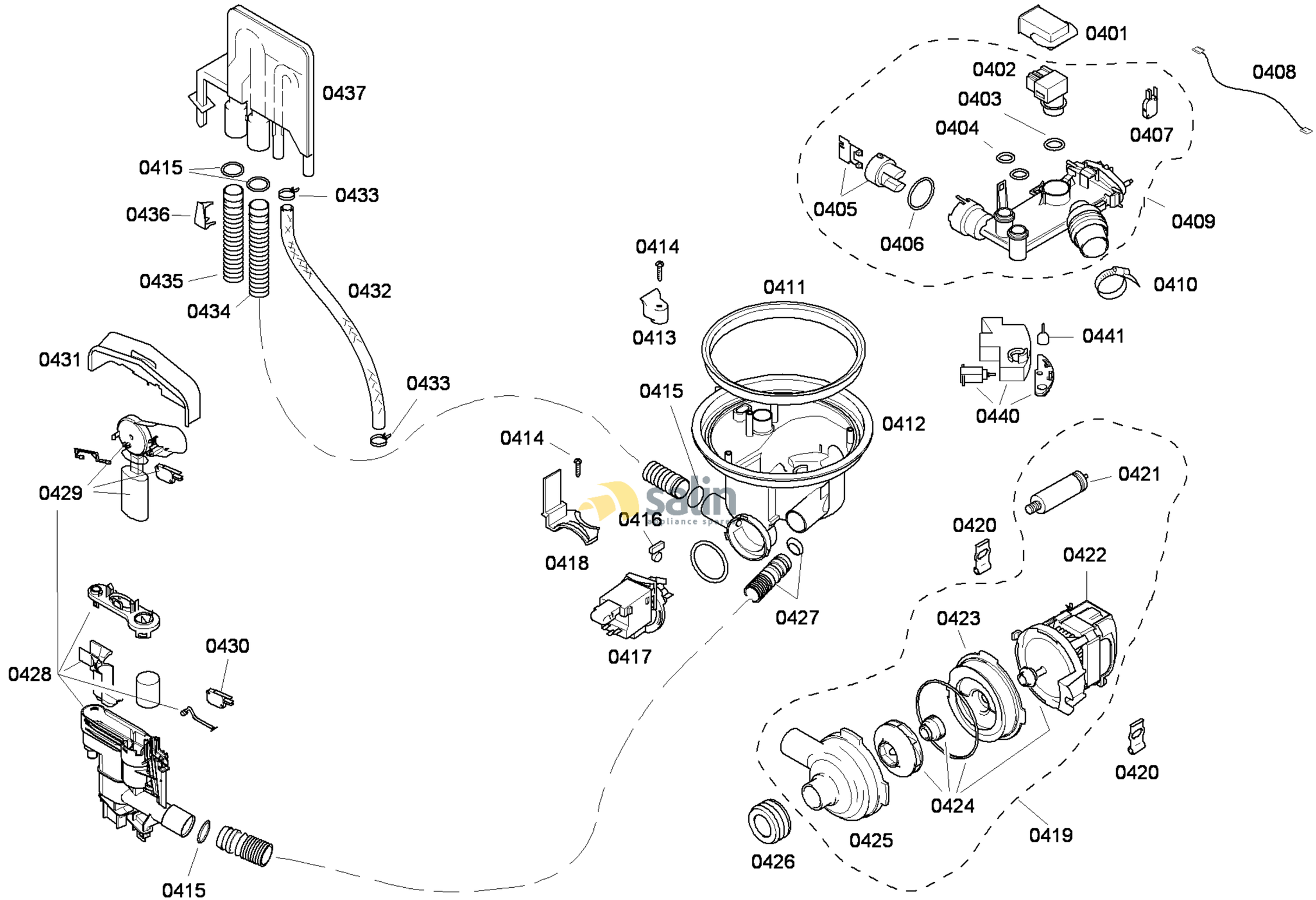

583000001287 03 aet 000 c 4/6

FAMILY : SHI66A05UC
MODEL NO: SHI66A05UC/14
Check Position No/Part No or Replacement No

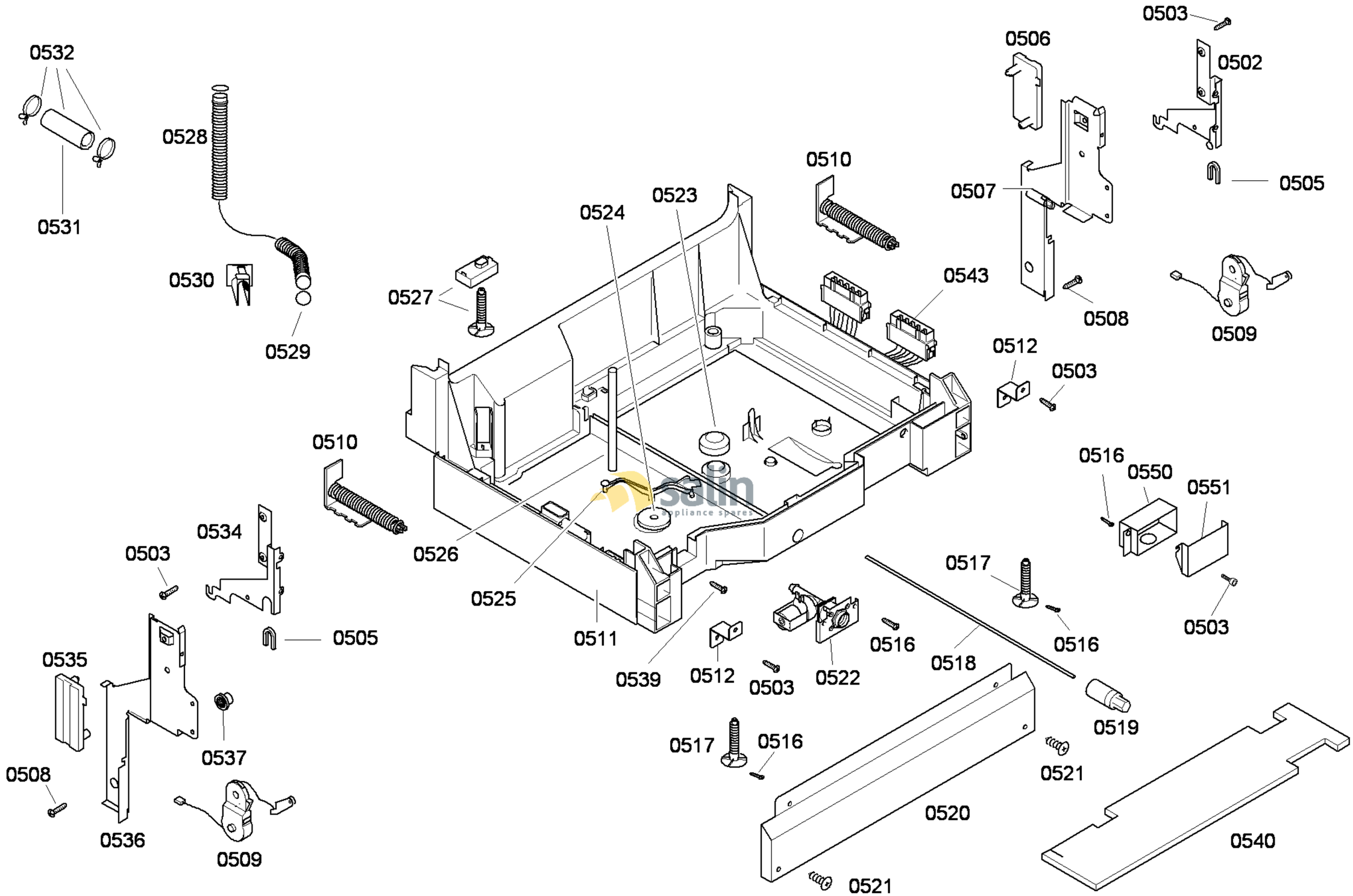

58300000128703 aet 000 c 5/6

FAMILY : SHI66A05UC
MODEL NO: SHI66A05UC/14
Check Position No/Part No or Replacement No

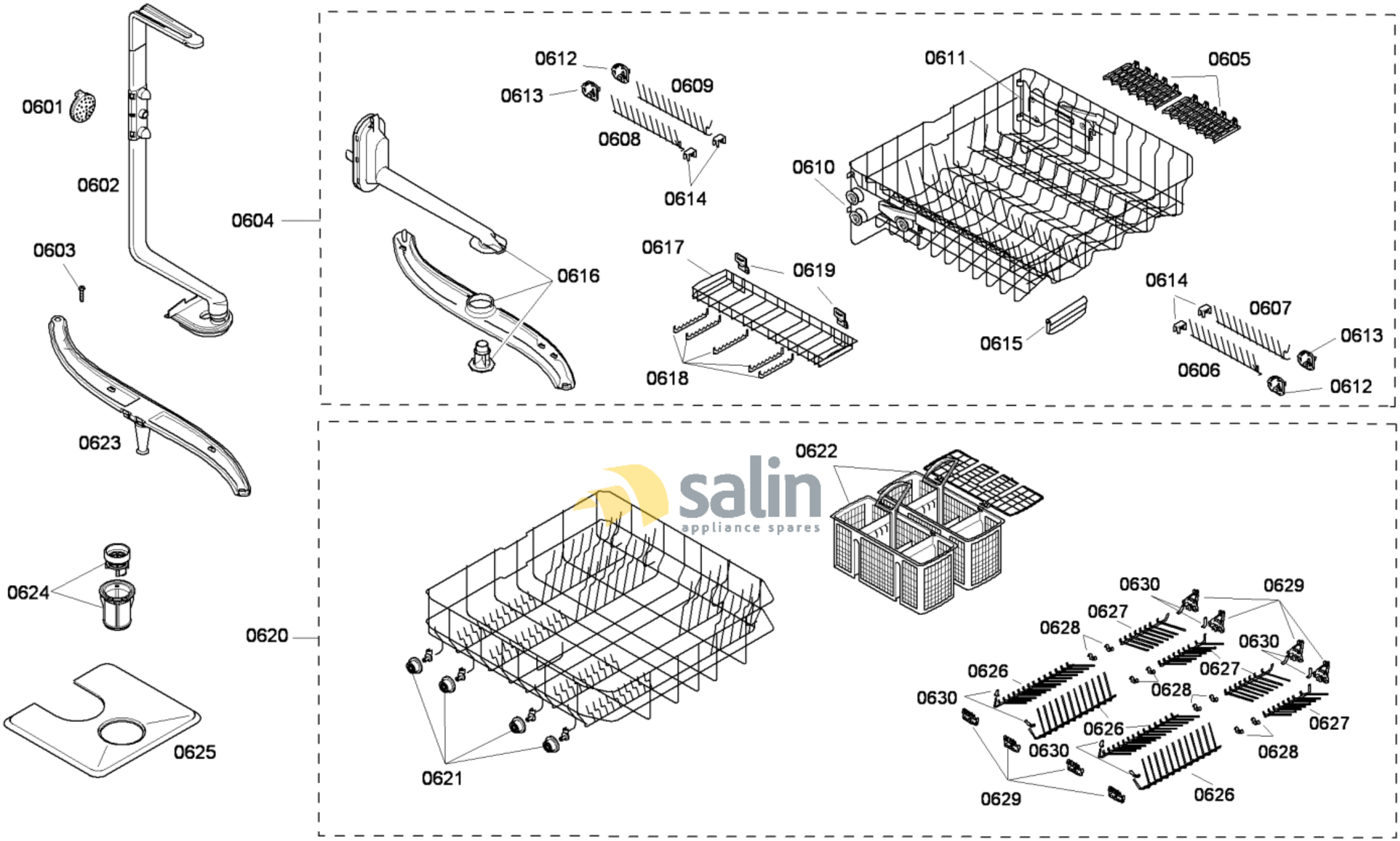

salin
appliance spares

583000001287 03 aet 000 c 6/6

FAMILY : SHI66A05UC

MODEL NO: SHI66A05UC/14

Check Position No/Part No or Replacement No