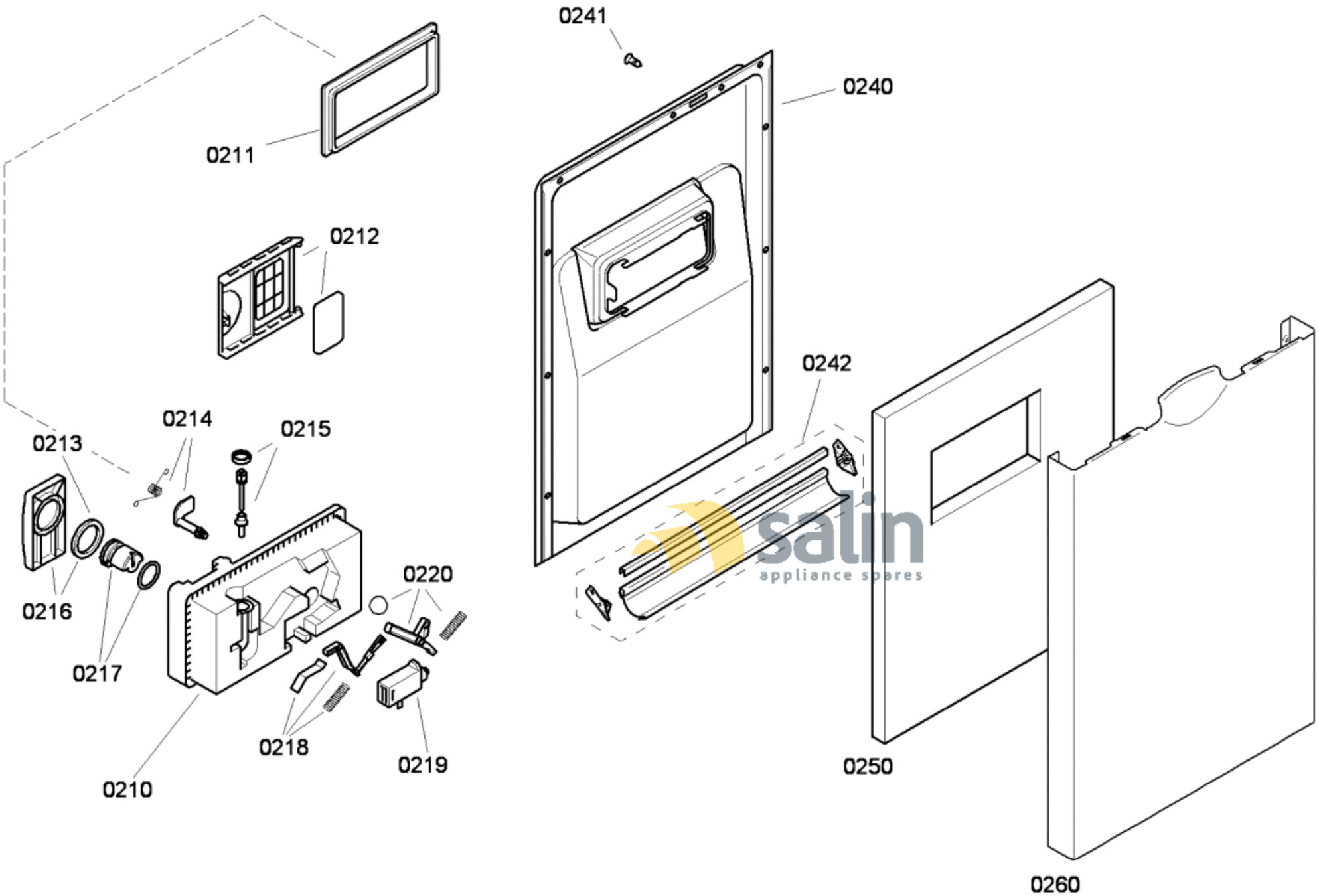

salin
appliance spares

58300000145218 aet 000 a 2/6

FAMILY : SRS46T52EU

MODEL NO: SRS46T52EU/01

Check Position No/Part No or Replacement No

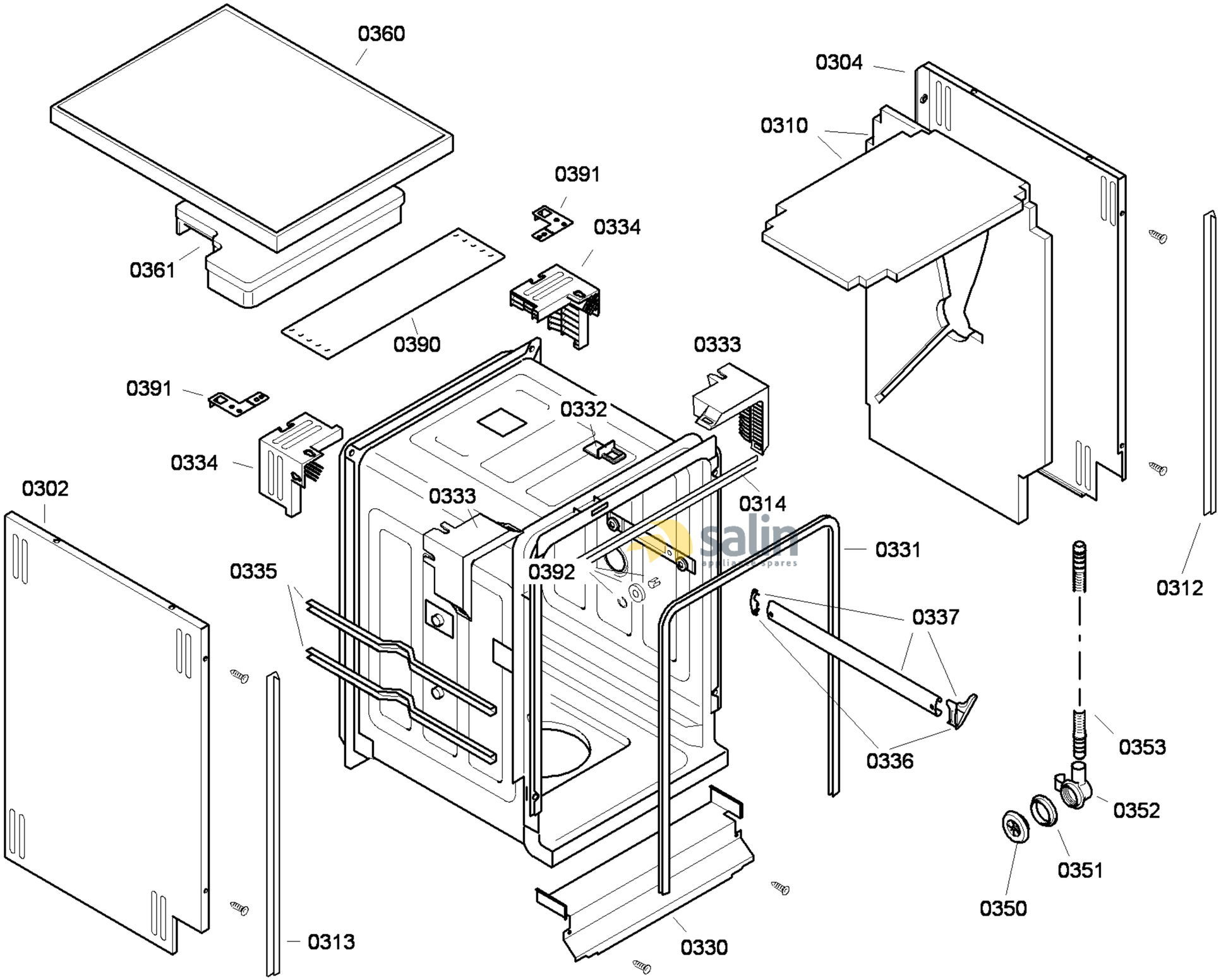

58300000145218 aet 000 a 3/6

FAMILY : SRS46T52EU
MODEL NO: SRS46T52EU/01
Check Position No/Part No or Replacement No

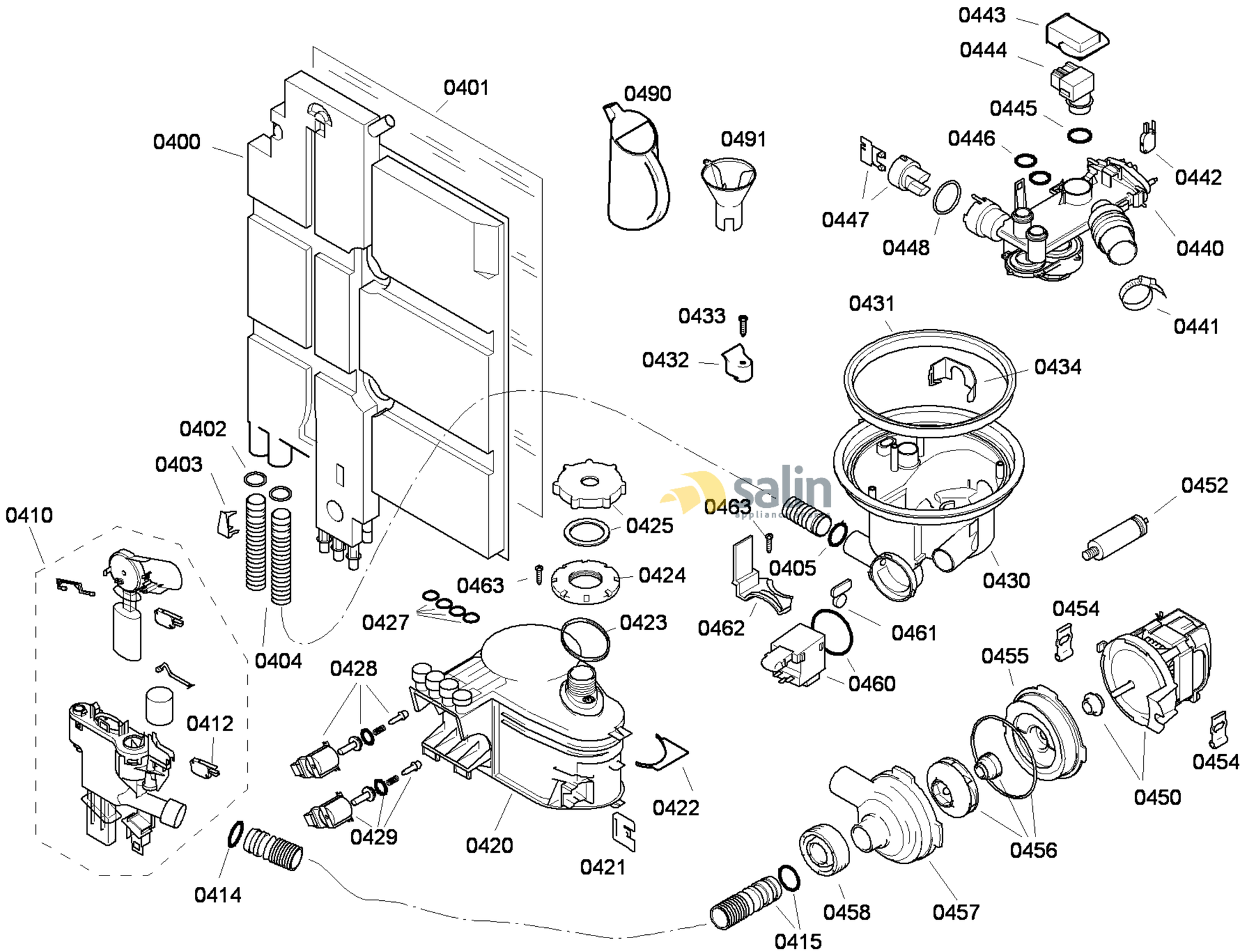

583000001 45218 aet 000 a 4/6

FAMILY : SRS46T52EU
MODEL NO: SRS46T52EU/01
Check Position No/Part No or Replacement No

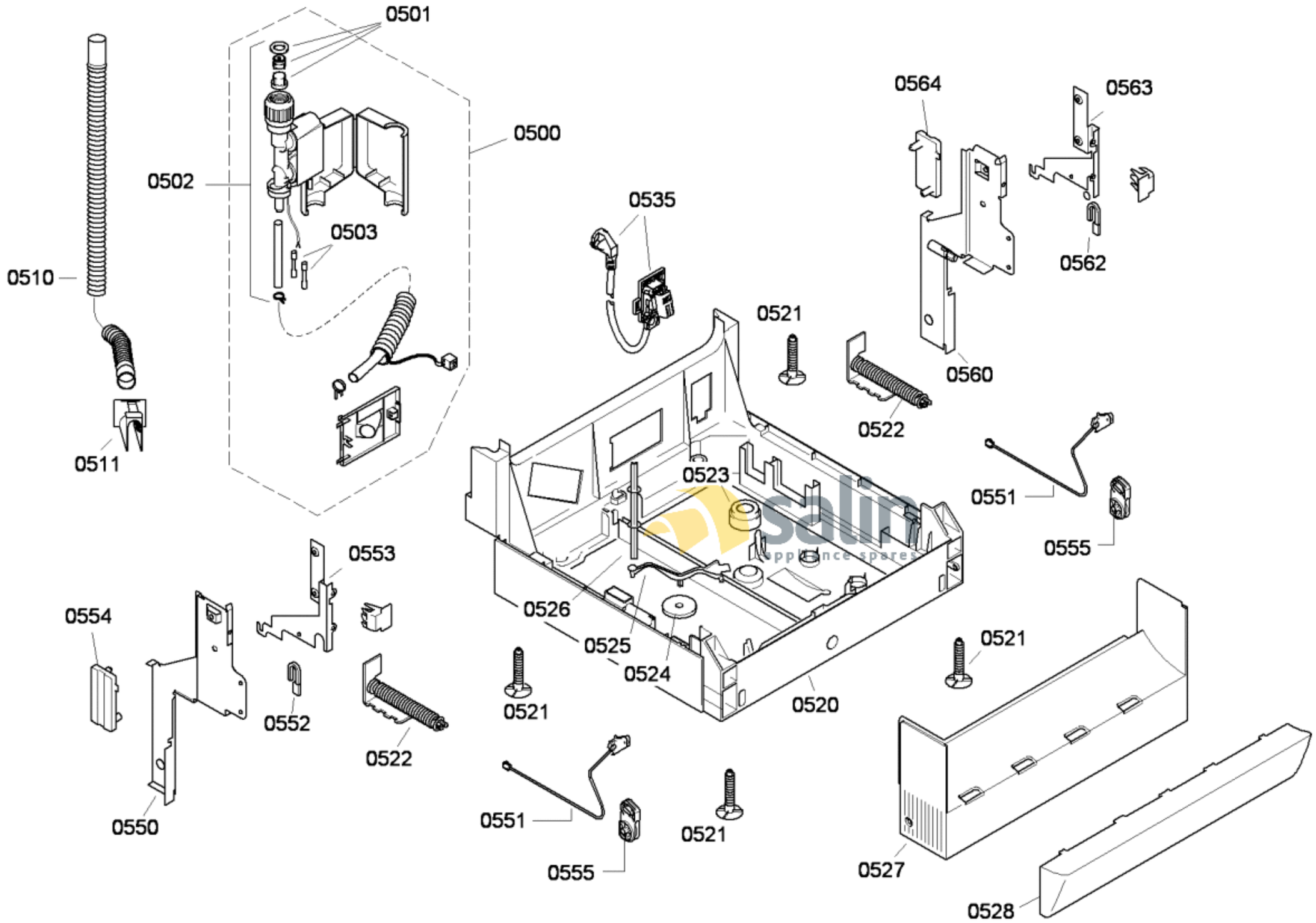

583000001 45218 aet 000 a 5/6

FAMILY : SRS46T52EU

MODEL NO: SRS46T52EU/01

Check Position No/Part No or Replacement No

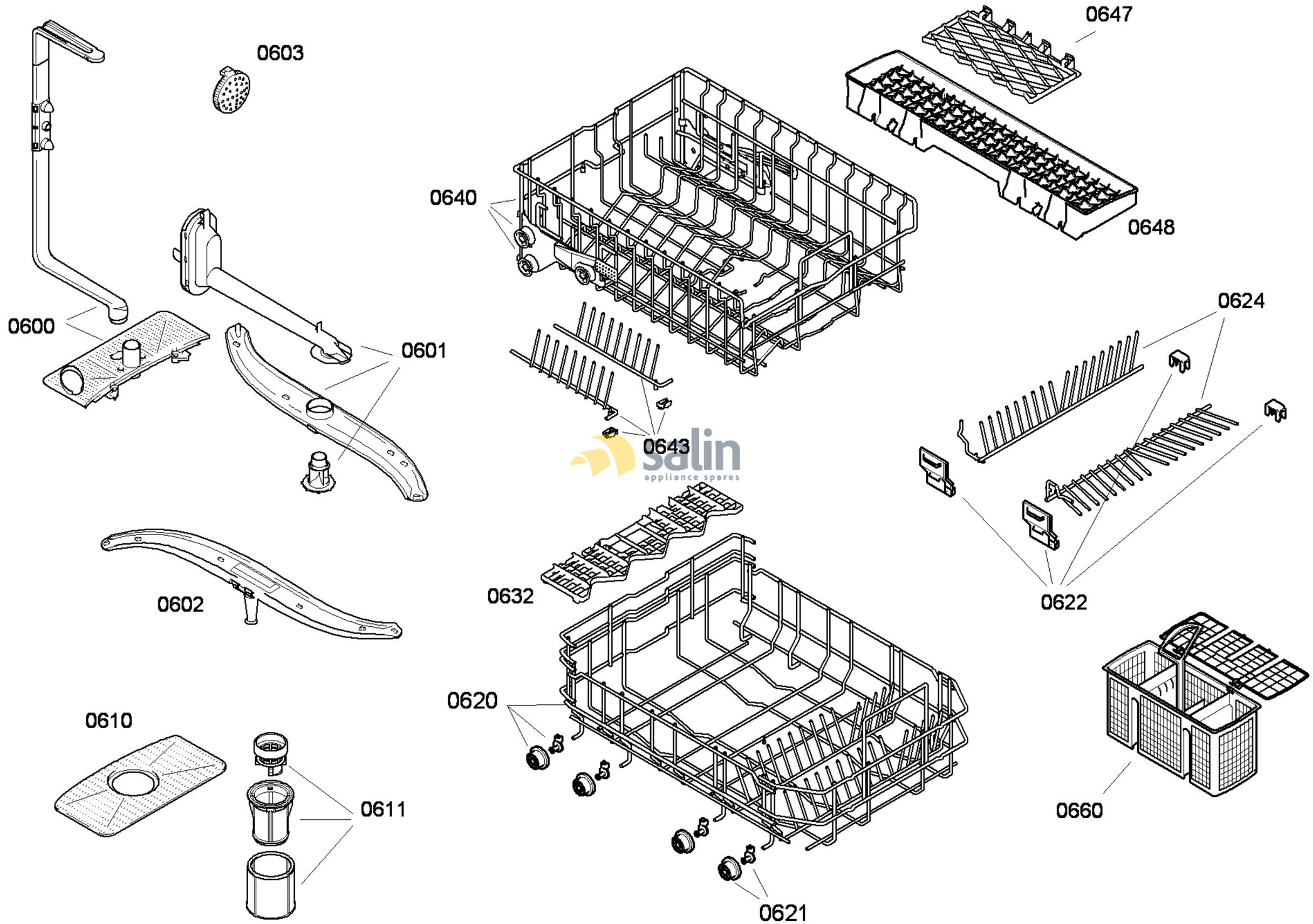

58300000145218 aet 000 a 6/6

FAMILY : SRS46T52EU
MODEL NO: SRS46T52EU/01
Check Position No/Part No or Replacement No