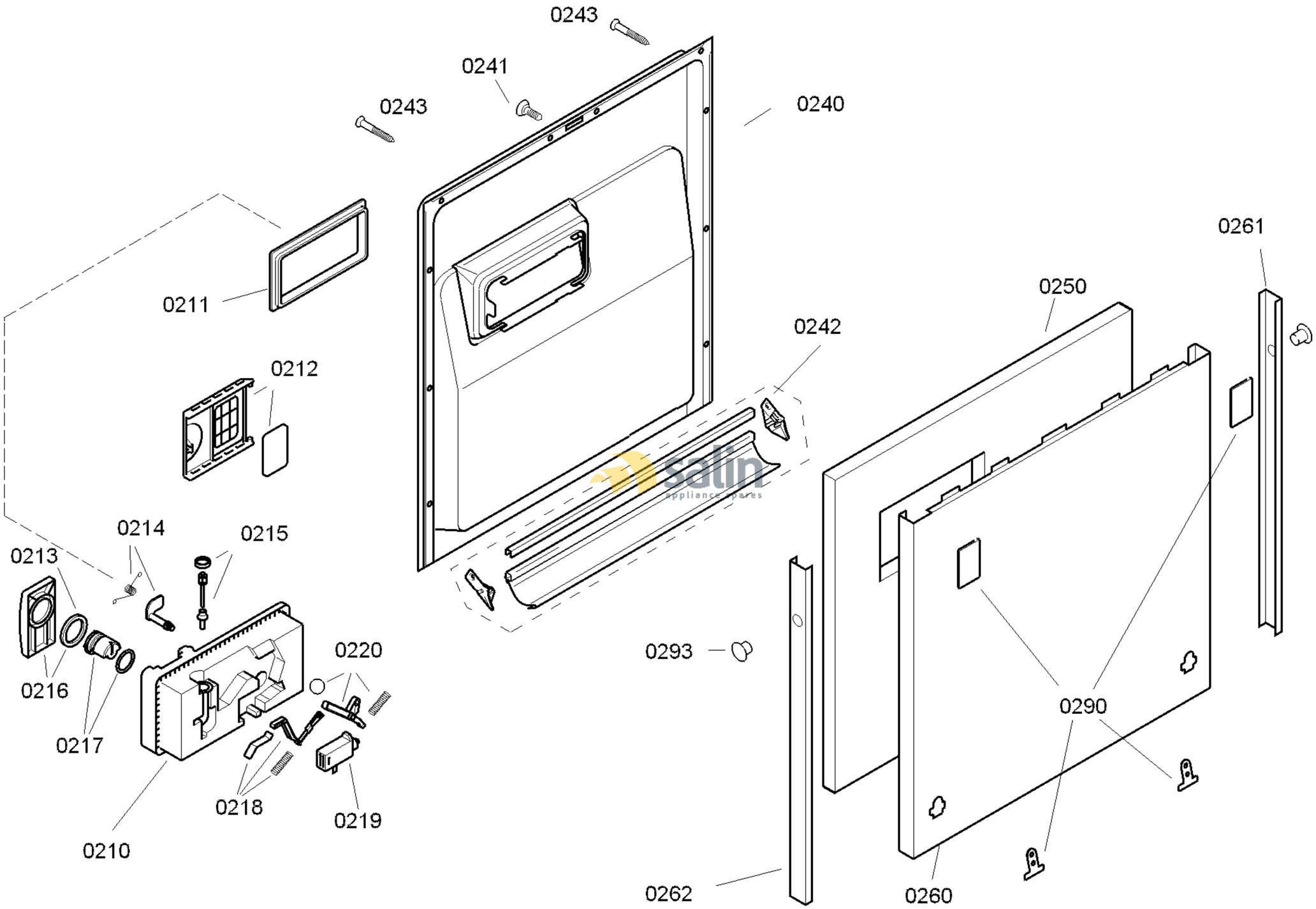

58300000114723 aet 000 d 2/6

FAMILY : SGV55M73EU
MODEL NO: SGV55M73EU/70
Check Position No/Part No or Replacement No

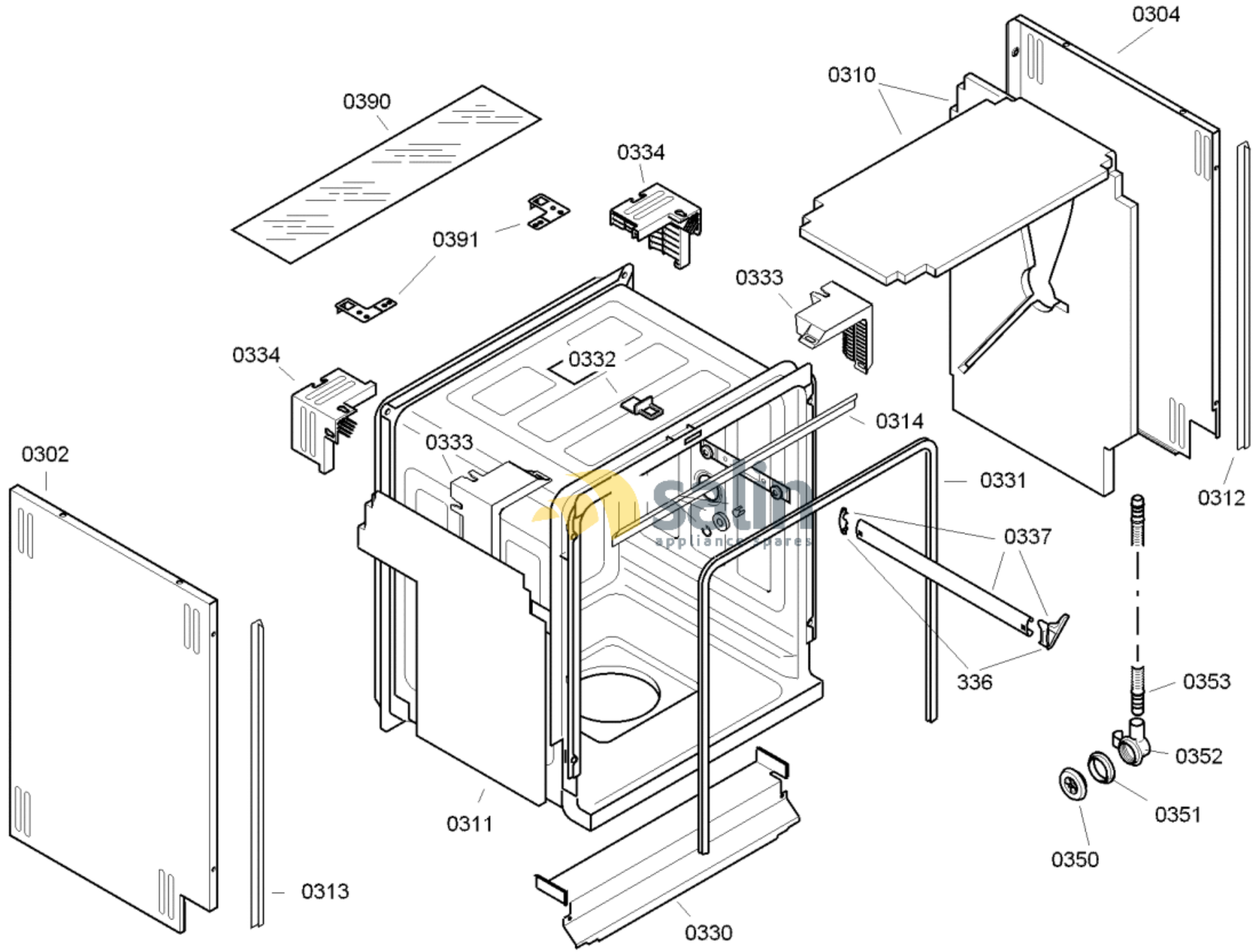

58300000114723 aet 000 d 3/6

FAMILY : SGV55M73EU

MODEL NO: SGV55M73EU/70

Check Position No/Part No or Replacement No

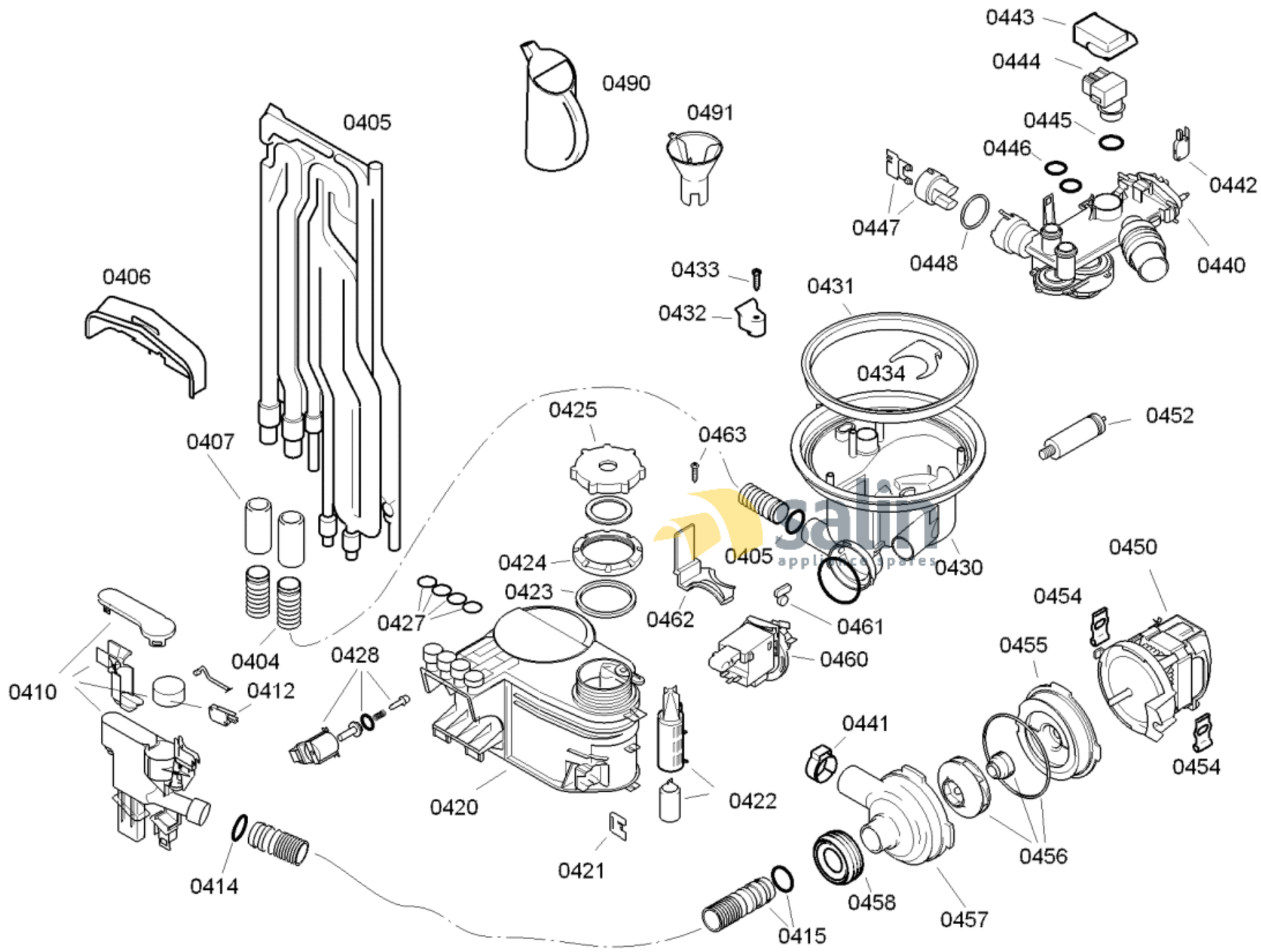

58300000114723 aet 000 d 4/6

FAMILY : SGV55M73EU

MODEL NO: SGV55M73EU/70

Check Position No/Part No or Replacement No

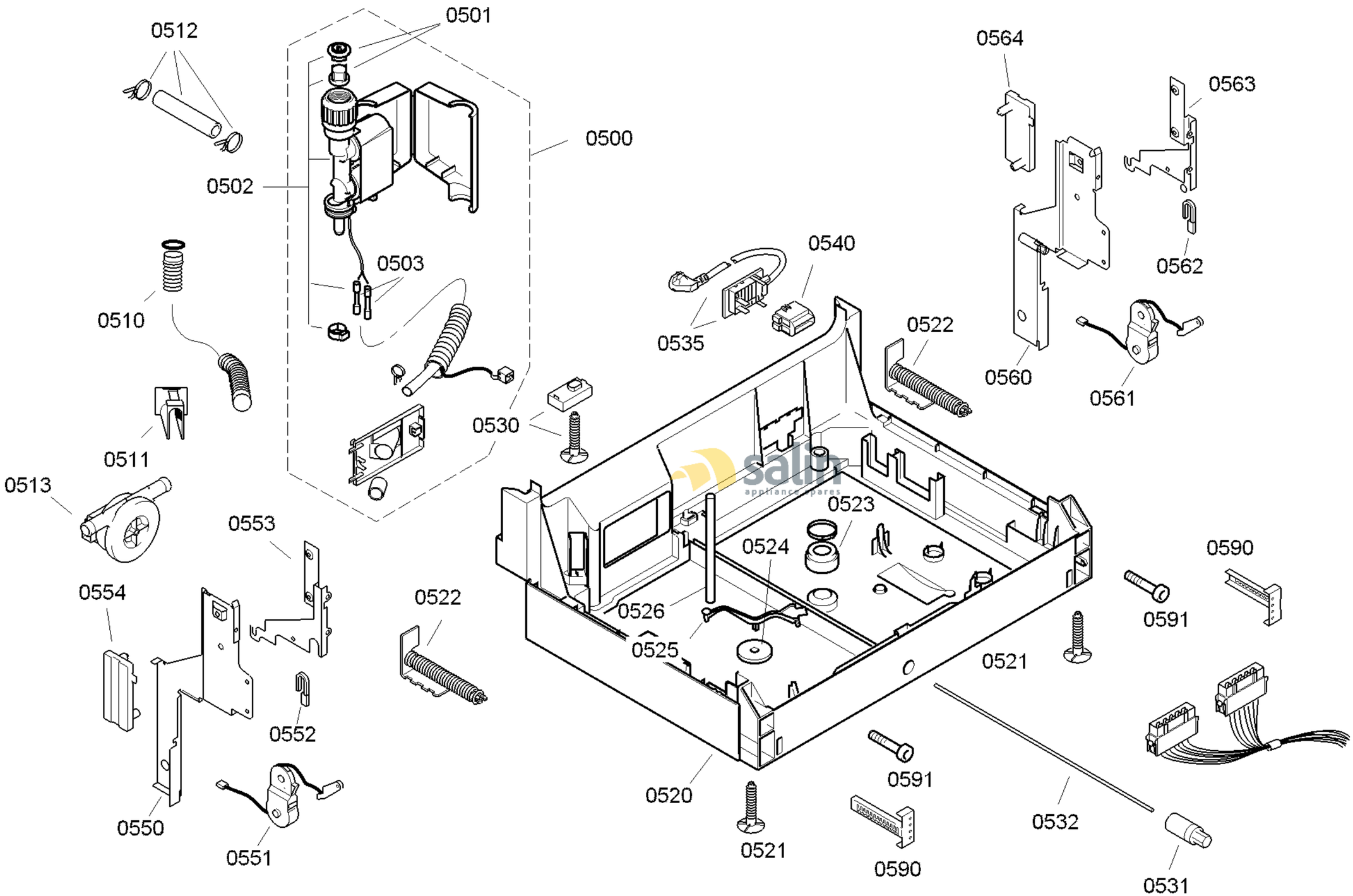

58300000114723 aet 000 d 5/6

FAMILY : SGV55M73EU
MODEL NO: SGV55M73EU/70
Check Position No/Part No or Replacement No

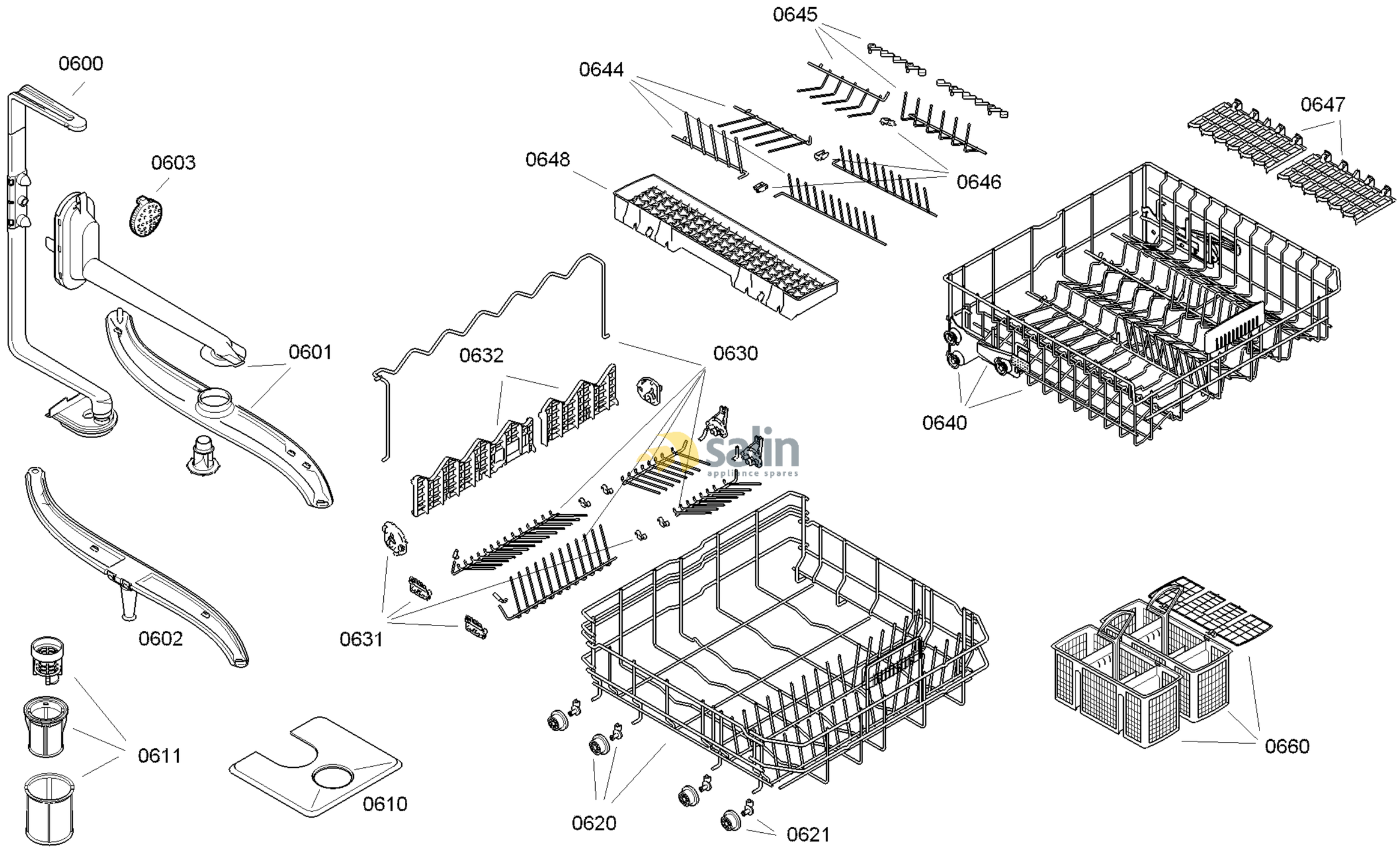

58300000114723 aet 000 d 6/6

FAMILY : SGV55M73EU
MODEL NO: SGV55M73EU/70
Check Position No/Part No or Replacement No