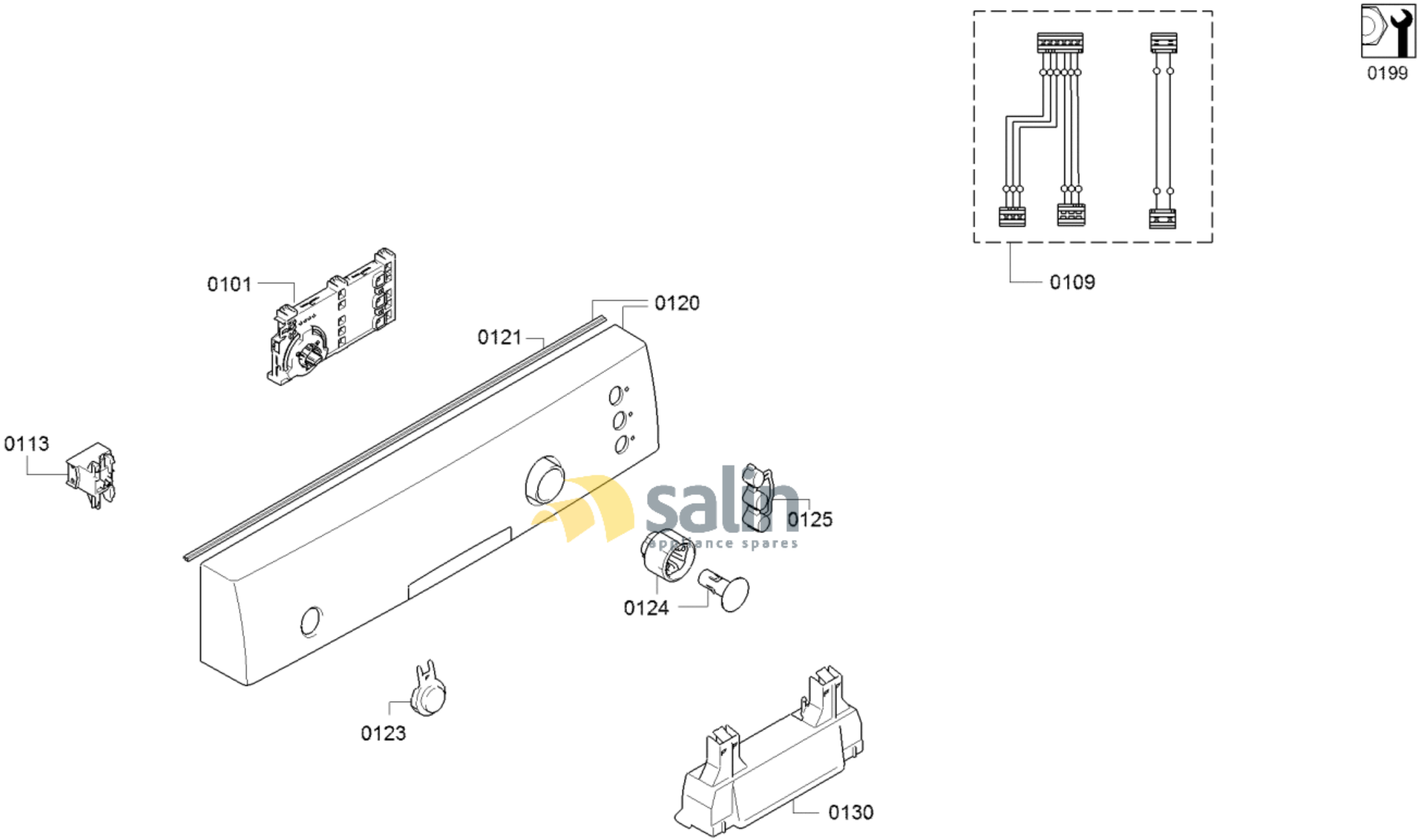

58300000189094 aet 000 b 1/6

FAMILY : SPS40E22EU

MODEL NO: SPS40E22EU/33

Check Position No/Part No or Replacement No

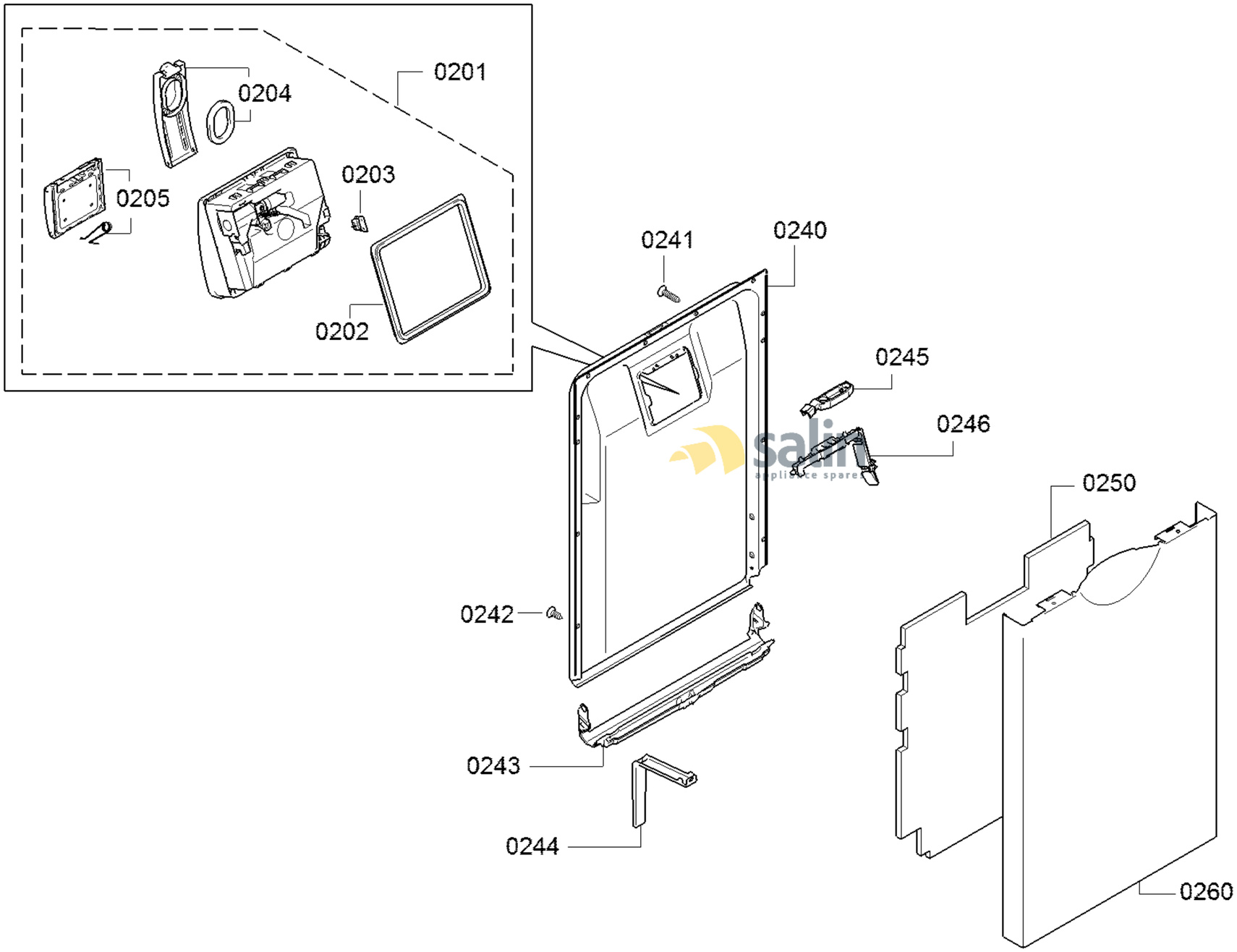

58300000189094 aet 000 b 2/6

FAMILY : SPS40E22EU
MODEL NO: SPS40E22EU/33
Check Position No/Part No or Replacement No

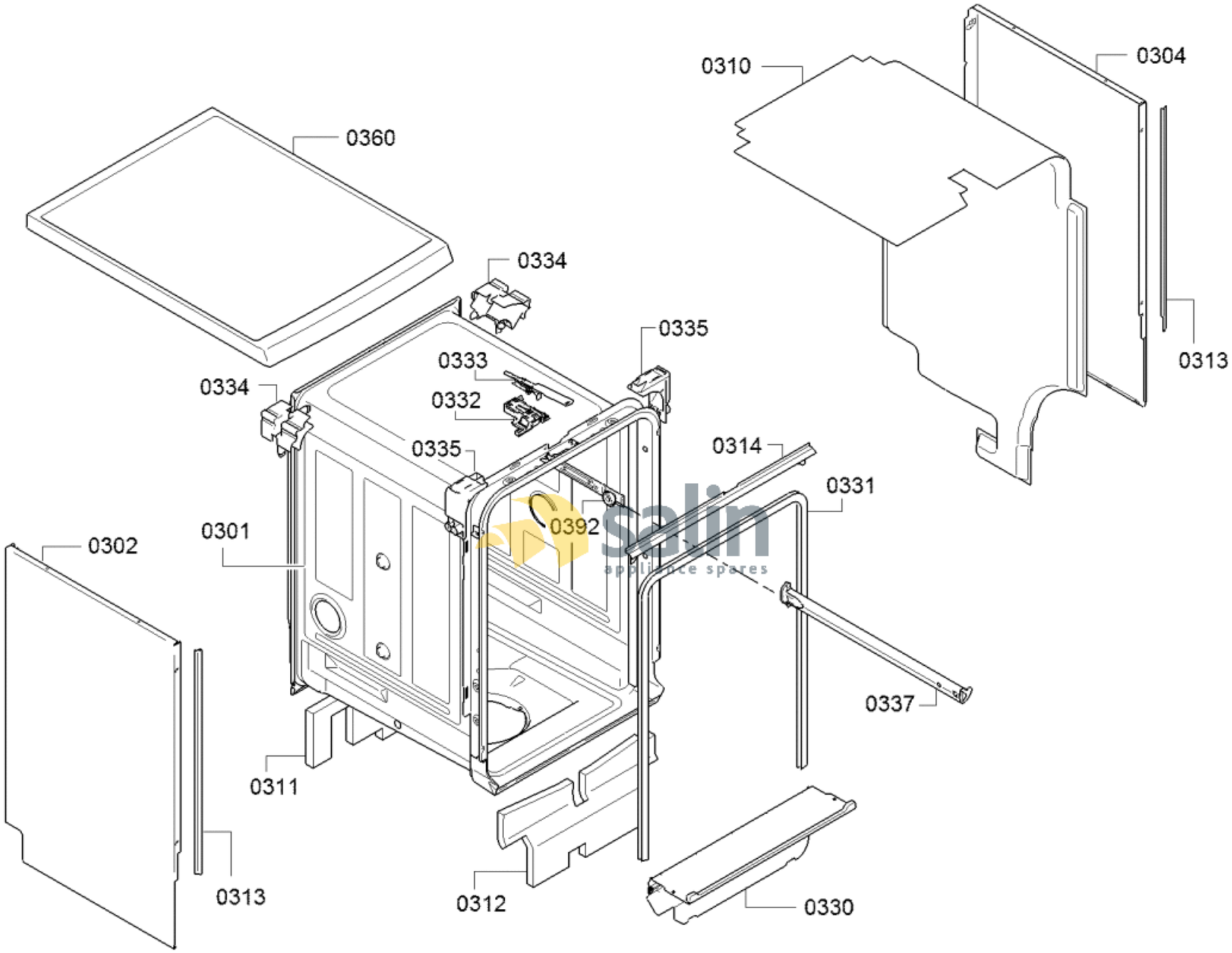

58300000189094 aet 000 b 3/6

FAMILY : SPS40E22EU

MODEL NO: SPS40E22EU/33

Check Position No/Part No or Replacement No

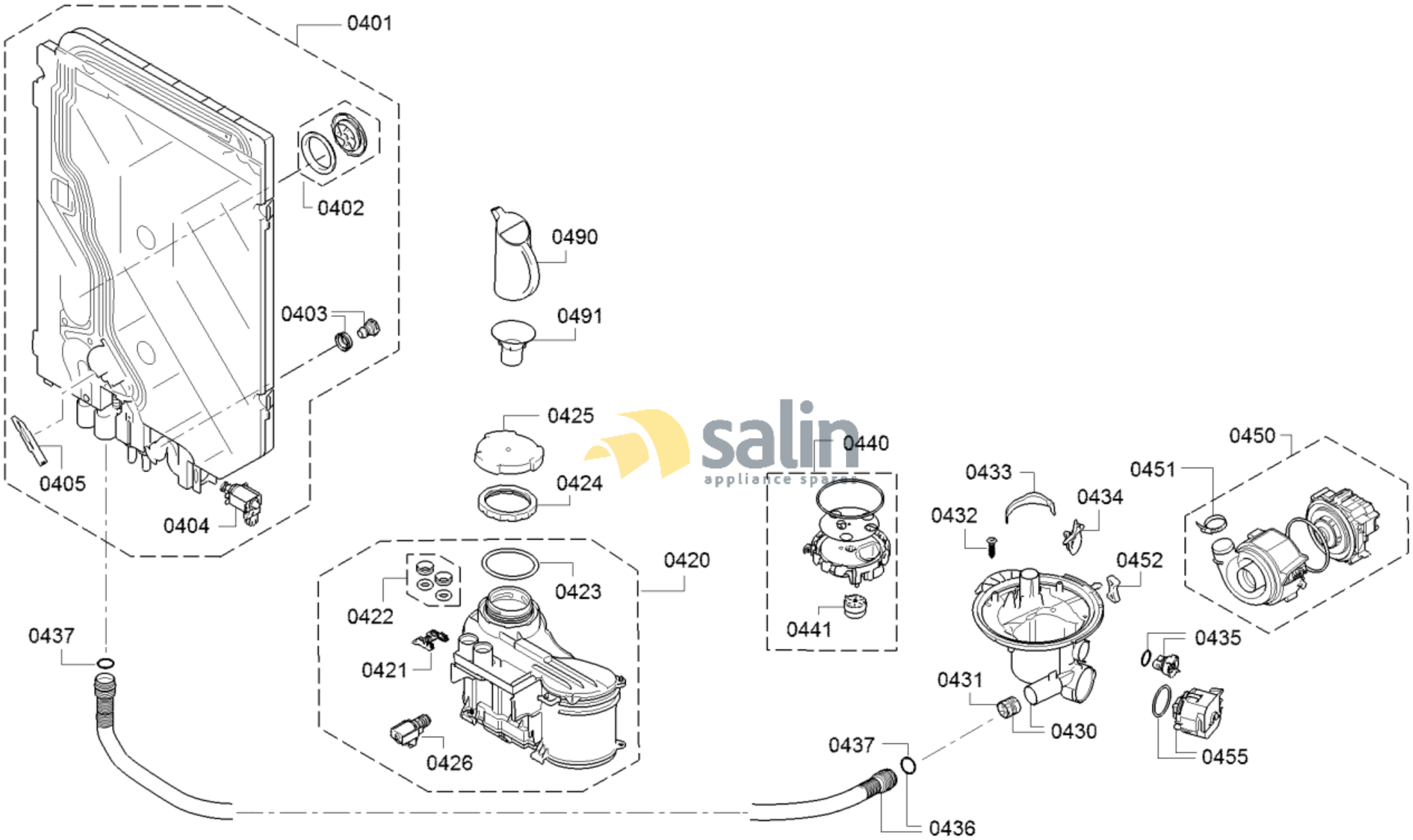

58300000189094 aet 000 b 4/6

FAMILY : SPS40E22EU

MODEL NO: SPS40E22EU/33

Check Position No/Part No or Replacement No

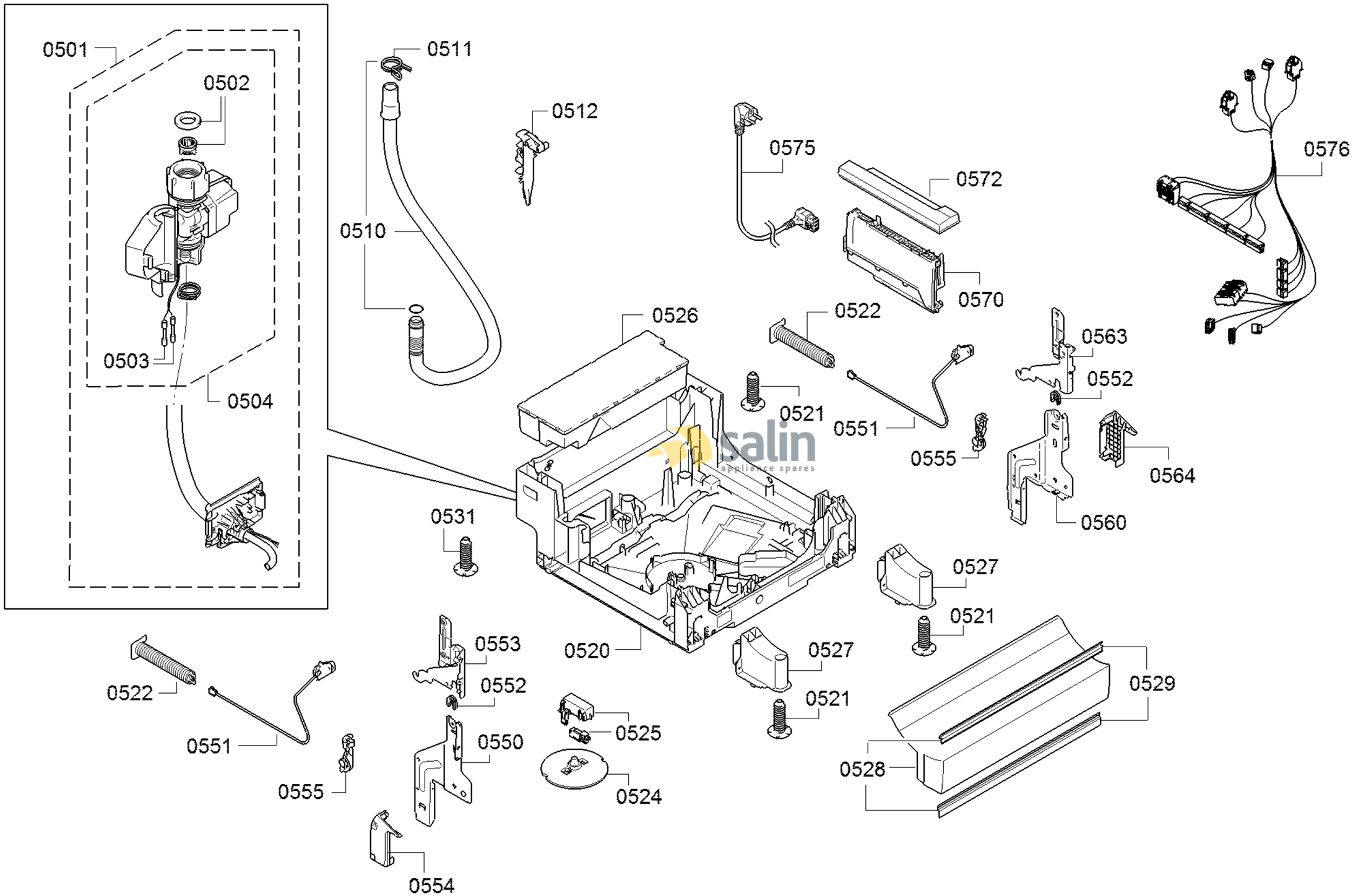

58300000189094 aet 000 b 5/6

FAMILY : SPS40E22EU
MODEL NO: SPS40E22EU/33
Check Position No/Part No or Replacement No

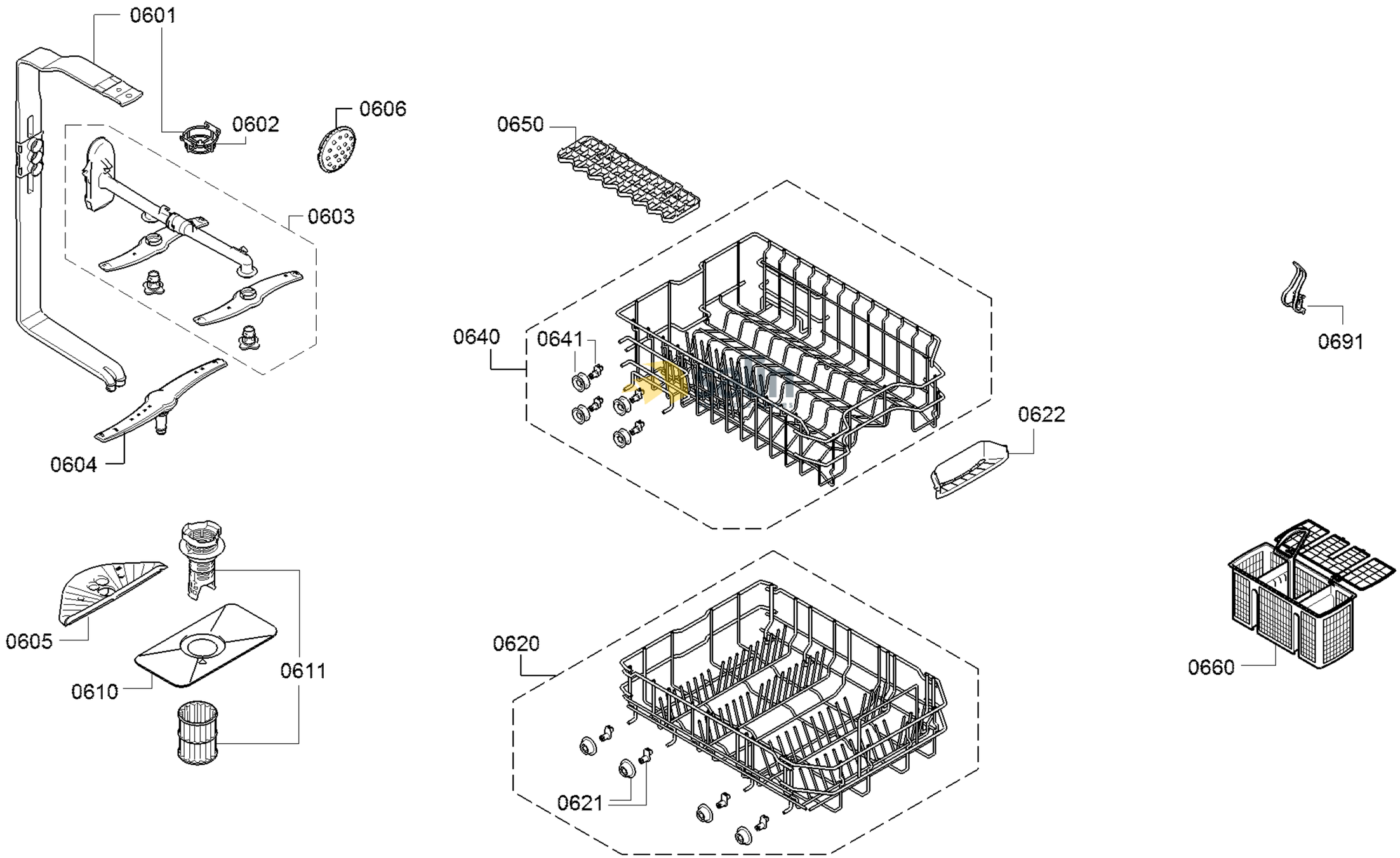

58300000189094 aet 000 b 6/6

FAMILY : SPS40E22EU
MODEL NO: SPS40E22EU/33
Check Position No/Part No or Replacement No