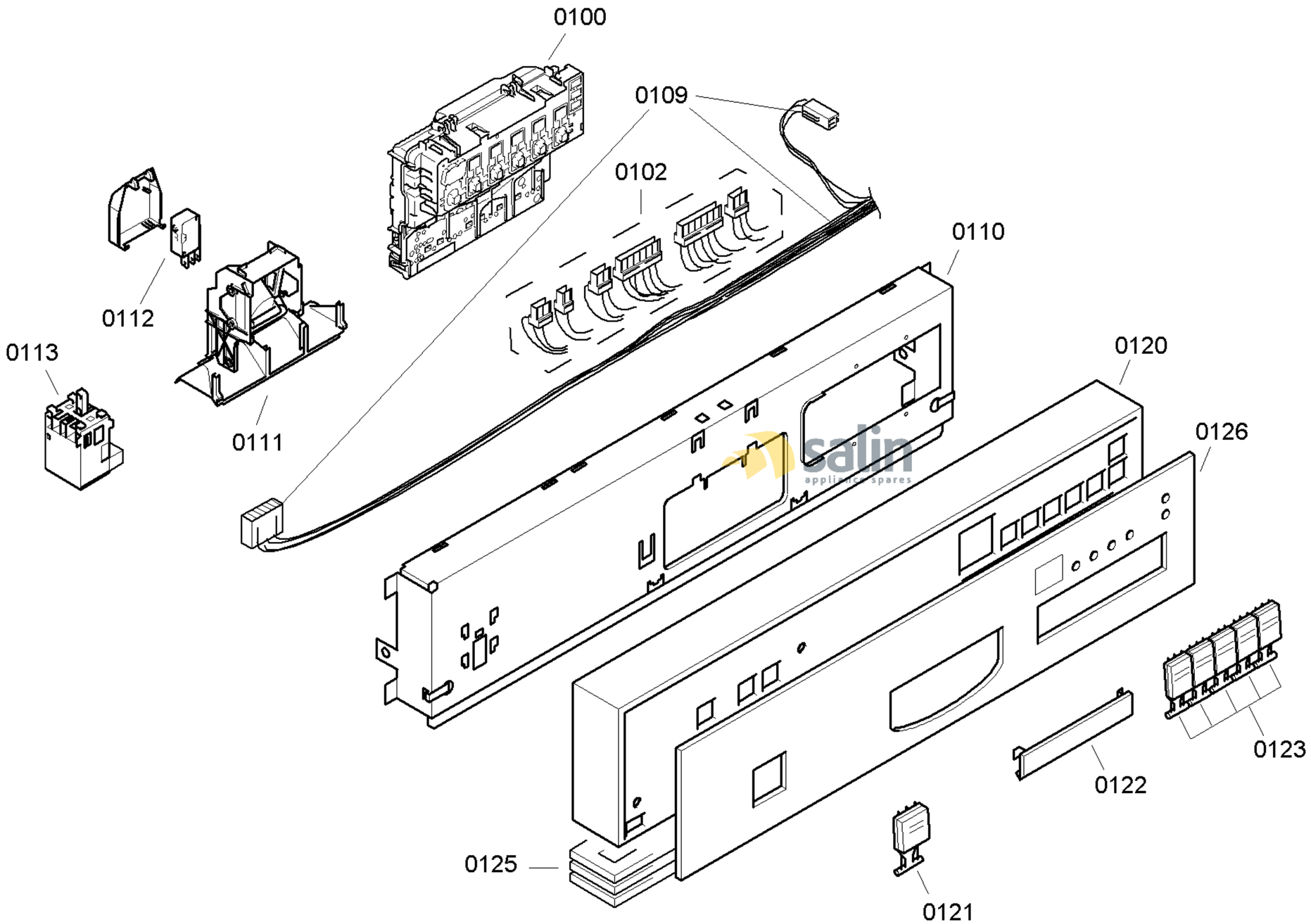

58300000106438 aet 000 c 1/6

FAMILY : SRI45T05CZ
MODEL NO: SRI45T05CZ/23
Check Position No/Part No or Replacement No

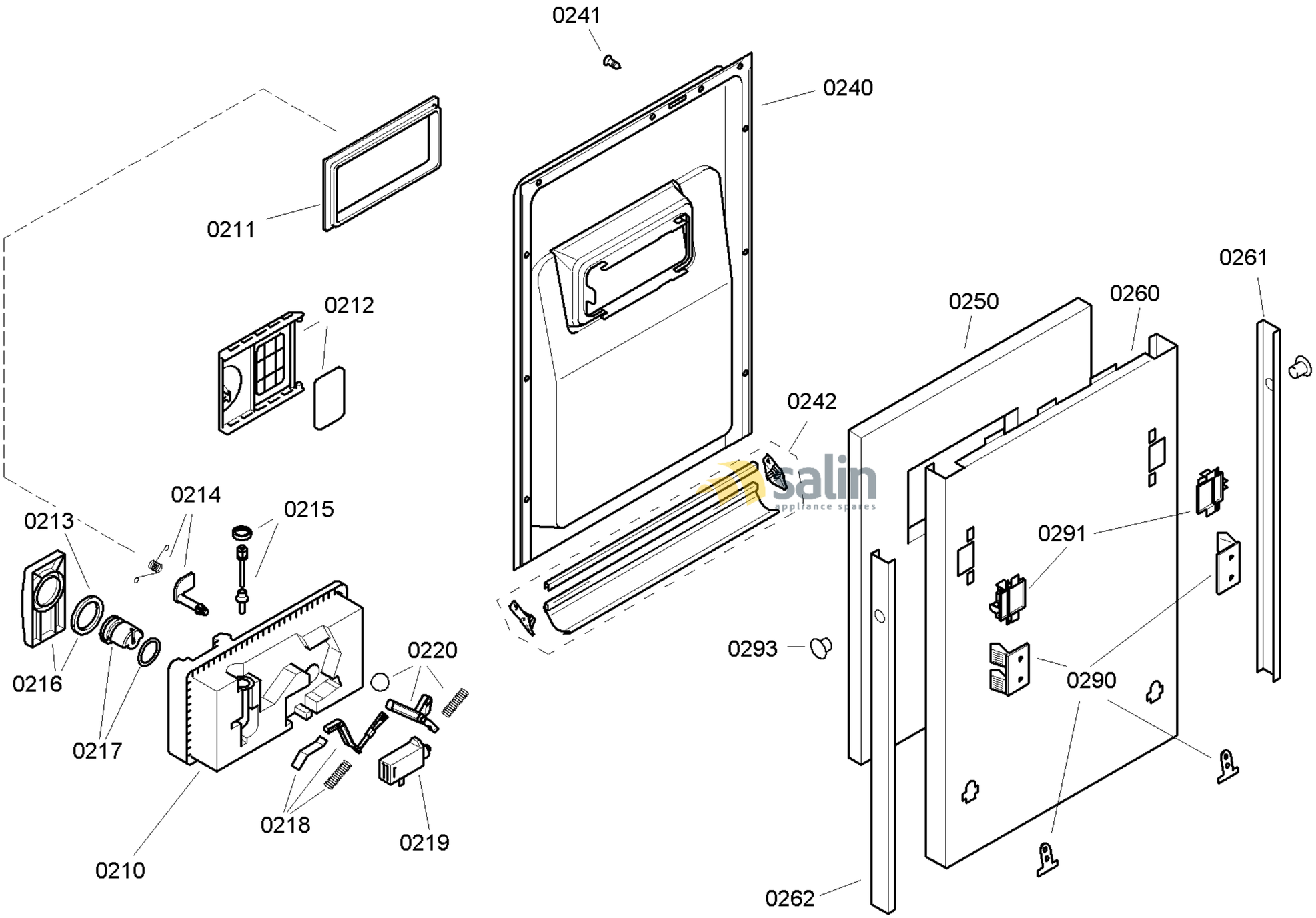

58300000106438 aet 000 c 2/6

FAMILY : SRI45T05CZ
MODEL NO: SRI45T05CZ/23
Check Position No/Part No or Replacement No

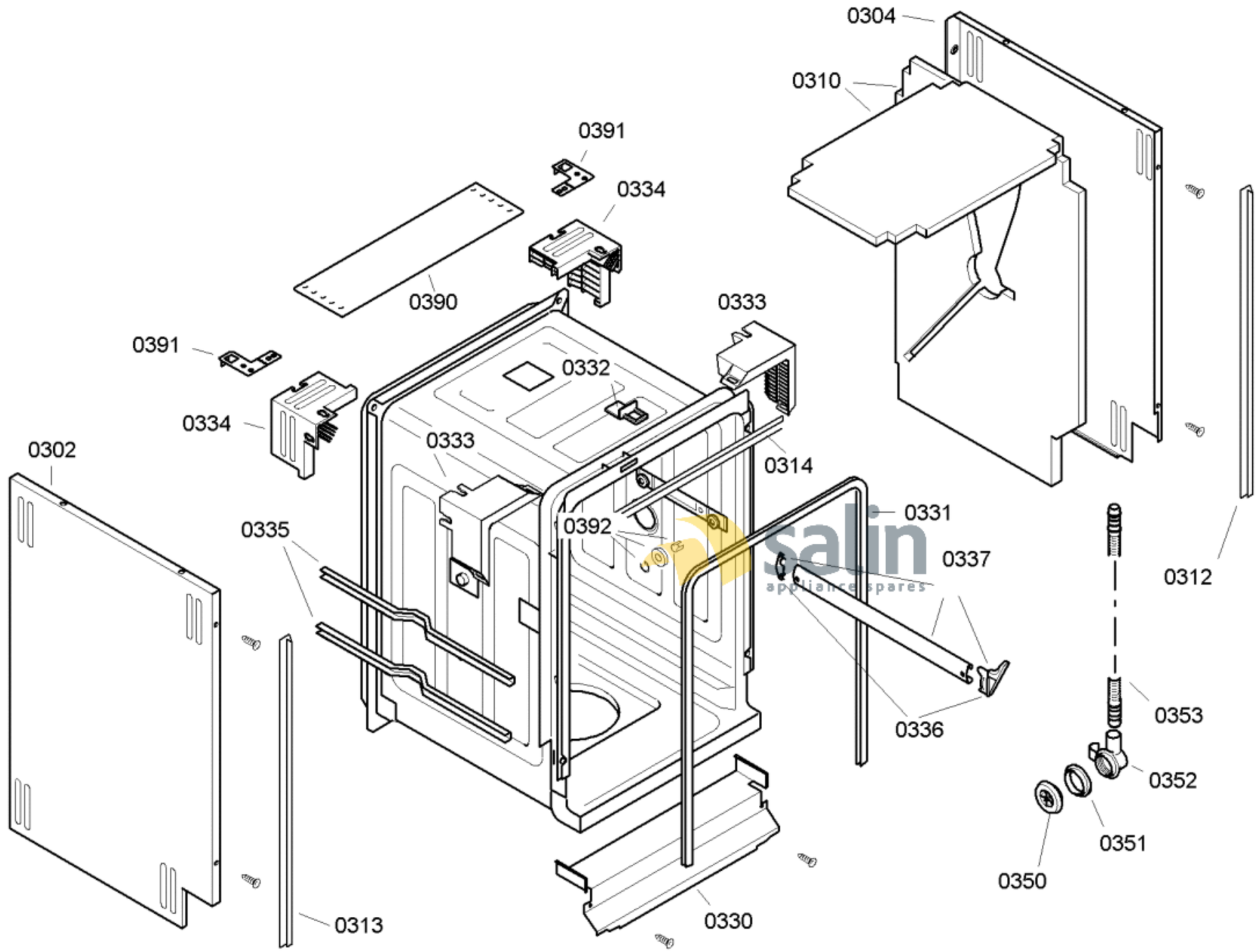

58300000106438 aet 000 c 3/6

FAMILY : SRI45T05CZ

MODEL NO: SRI45T05CZ/23

Check Position No/Part No or Replacement No

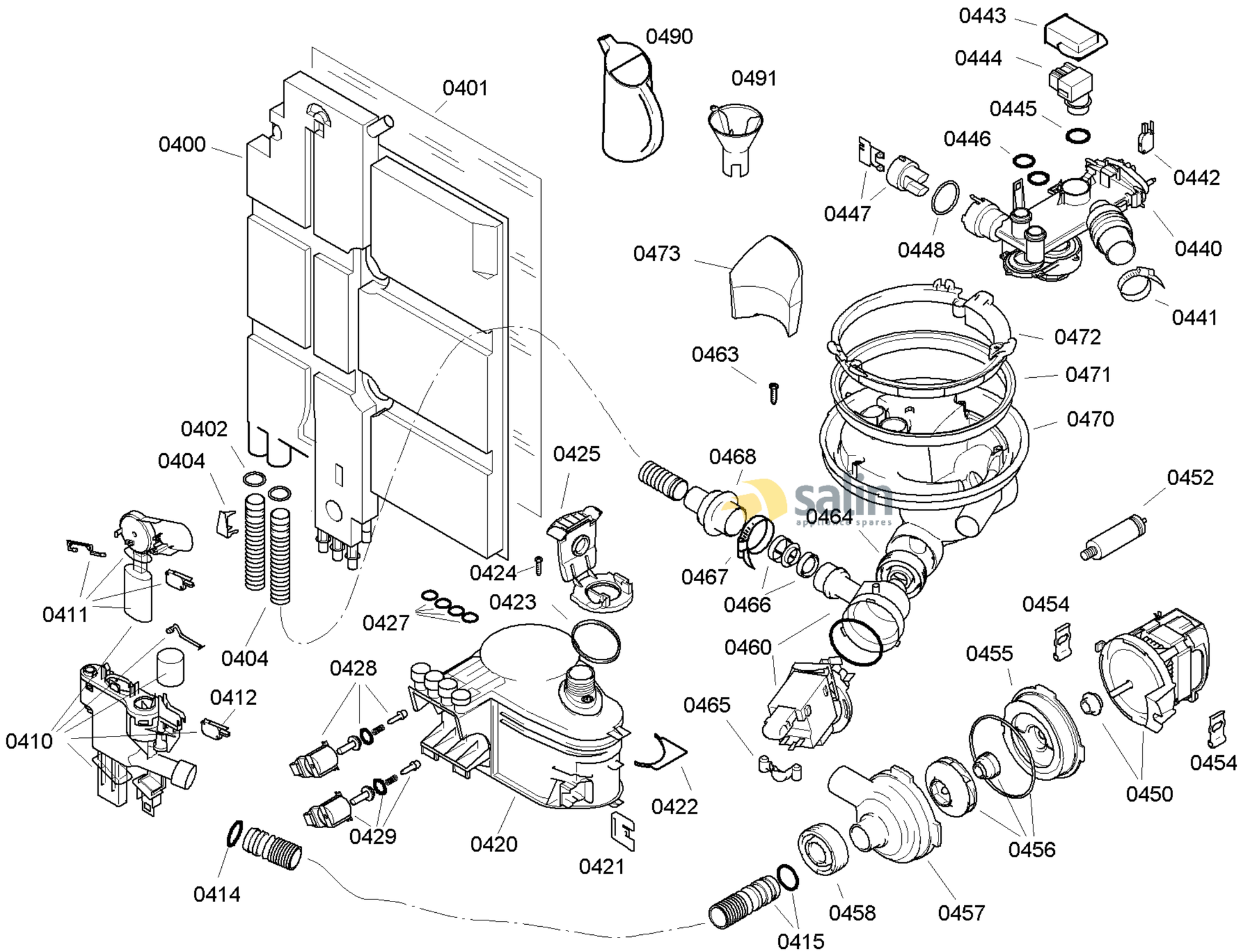

58300000106438 aet 000 c 4/6

FAMILY : SRI45T05CZ
MODEL NO: SRI45T05CZ/23
Check Position No/Part No or Replacement No

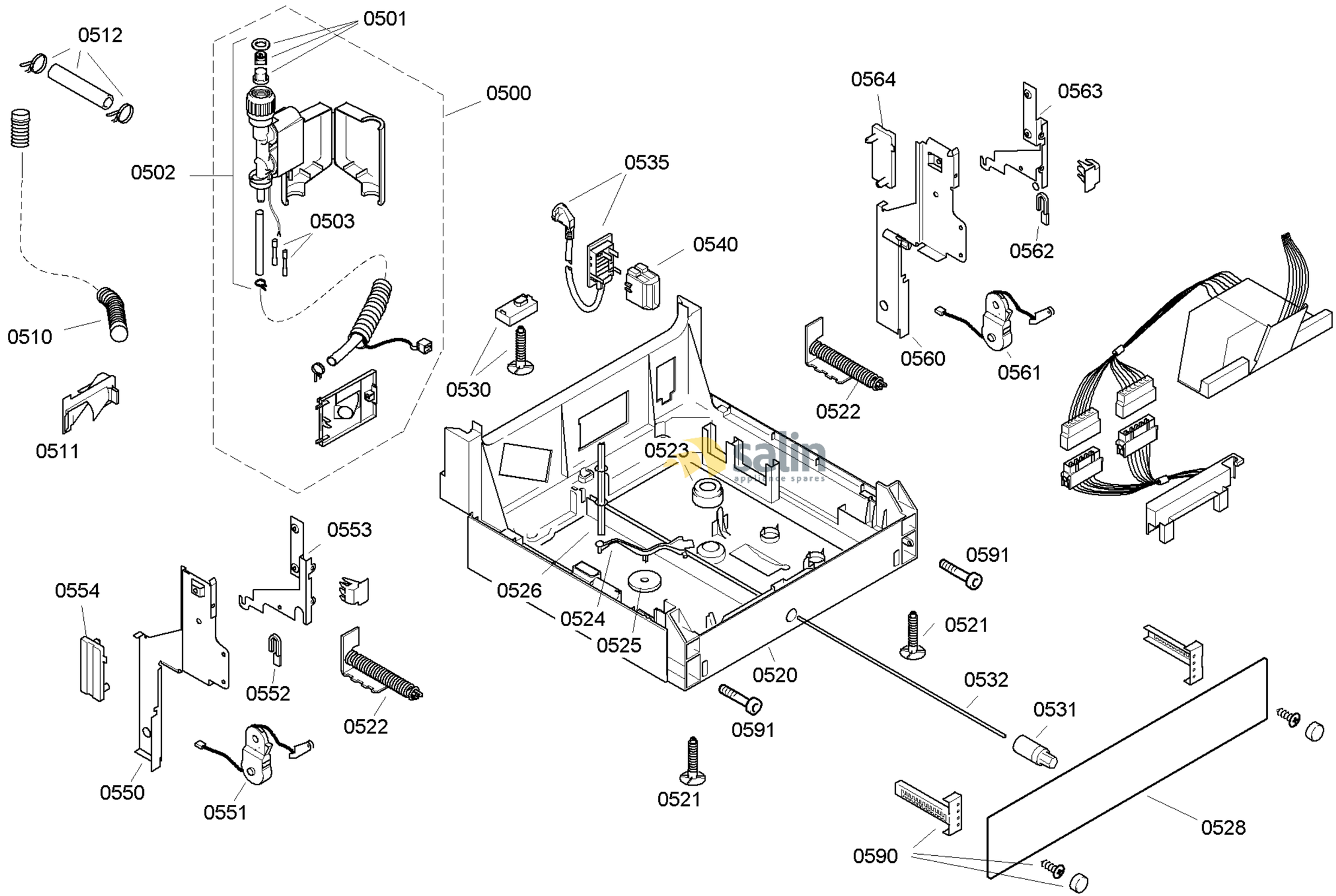

58300000106438 aet 000 c 5/6

FAMILY : SRI45T05CZ
MODEL NO: SRI45T05CZ/23
Check Position No/Part No or Replacement No

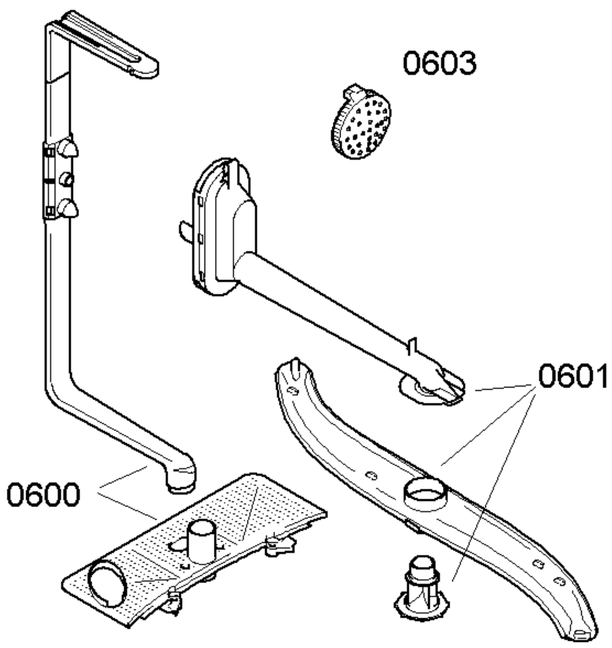

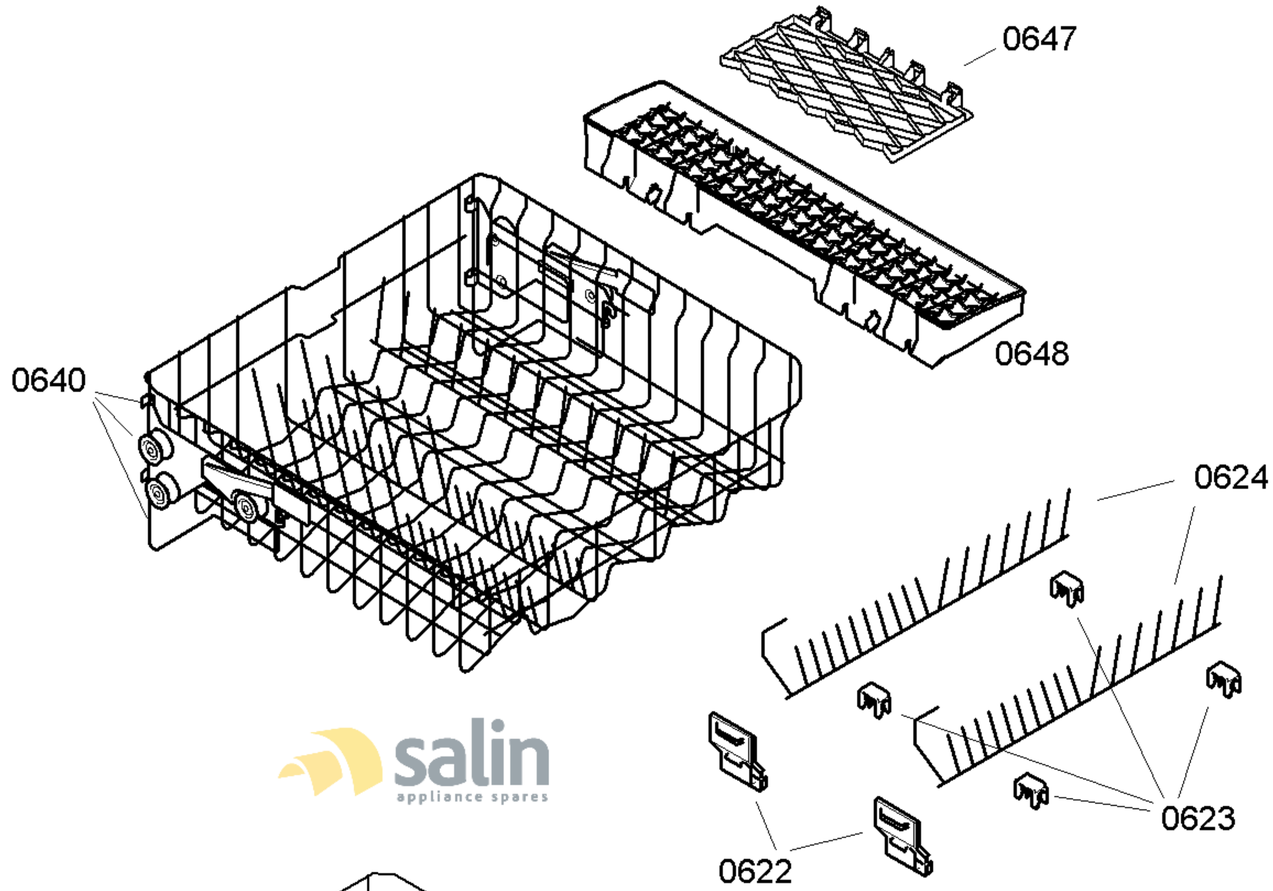

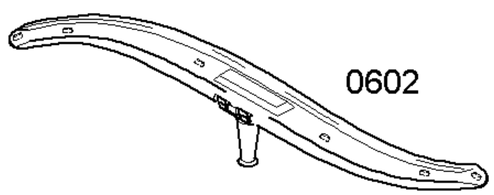

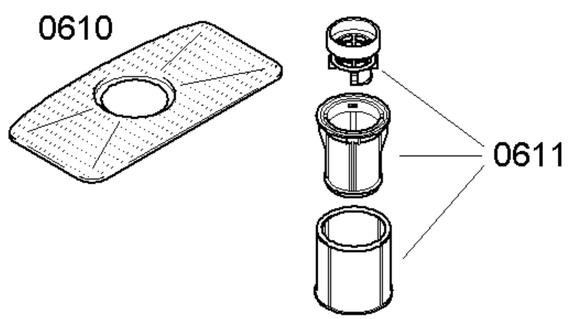

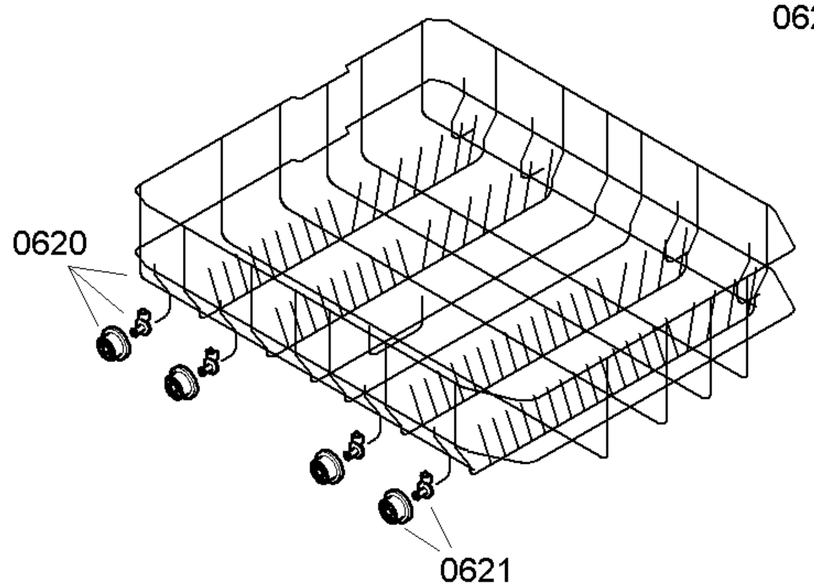

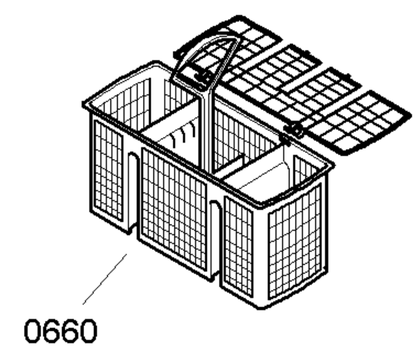

salin
appliance spares

58300000106438 aet 000 c 6/6

FAMILY : SRI45T05CZ
MODEL NO: SRI45T05CZ/23
Check Position No/Part No or Replacement No