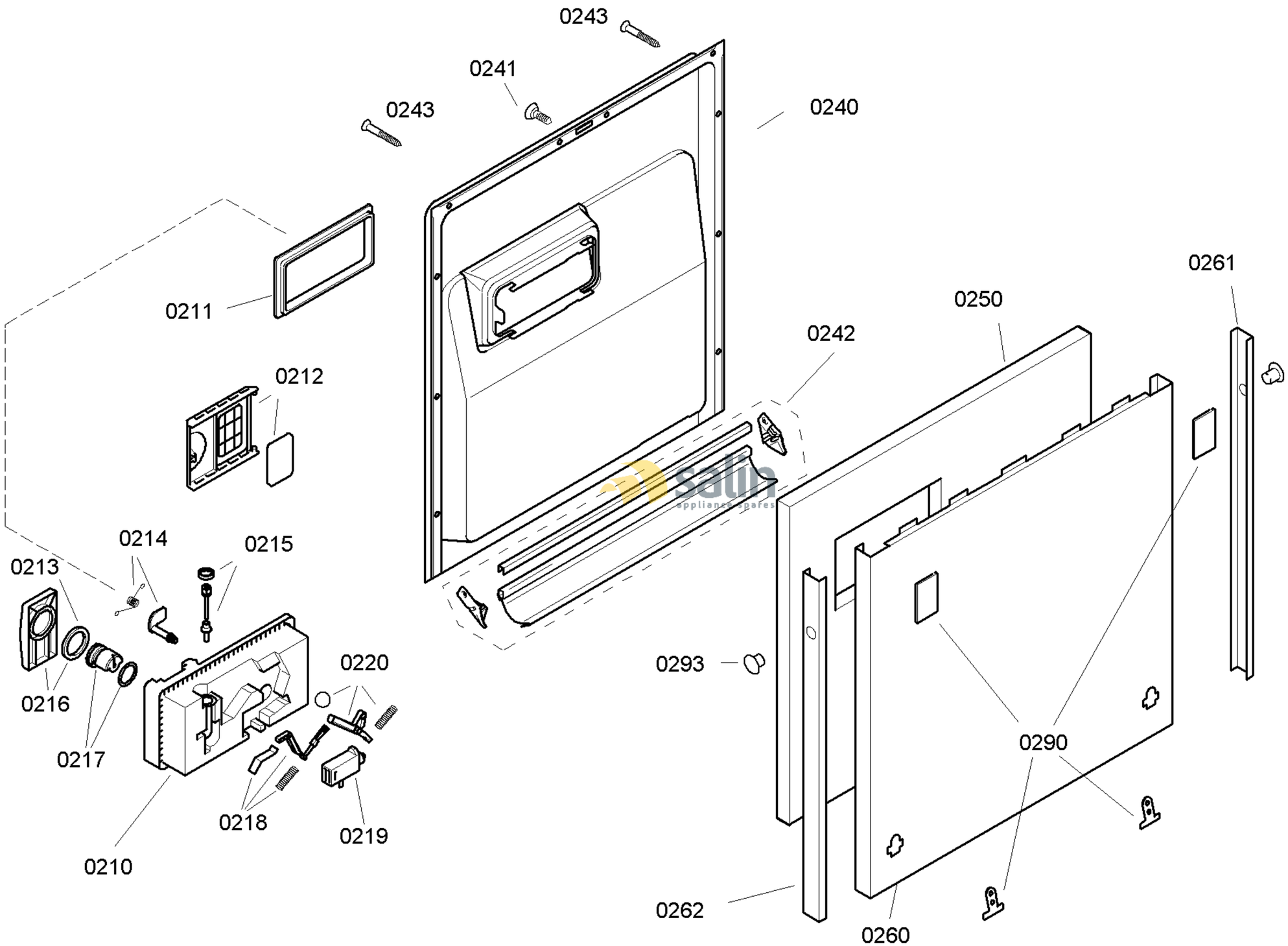

58300000122823 aet 000 a 2/6

FAMILY : SGV45E03UC
MODEL NO: SGV45E03UC/01
Check Position No/Part No or Replacement No

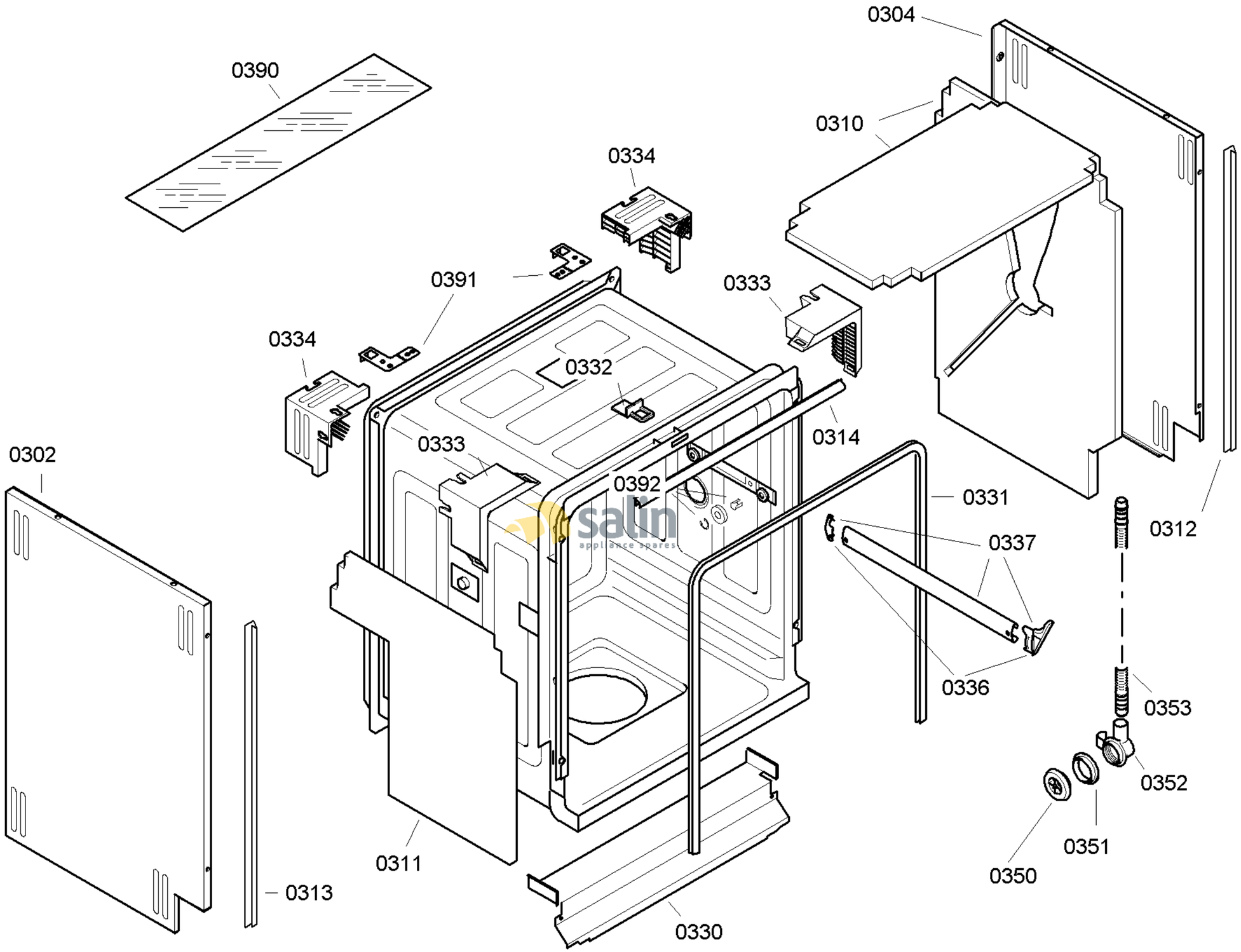

58300000122823 aet 000 a 3/6

FAMILY : SGV45E03UC
MODEL NO: SGV45E03UC/01
Check Position No/Part No or Replacement No

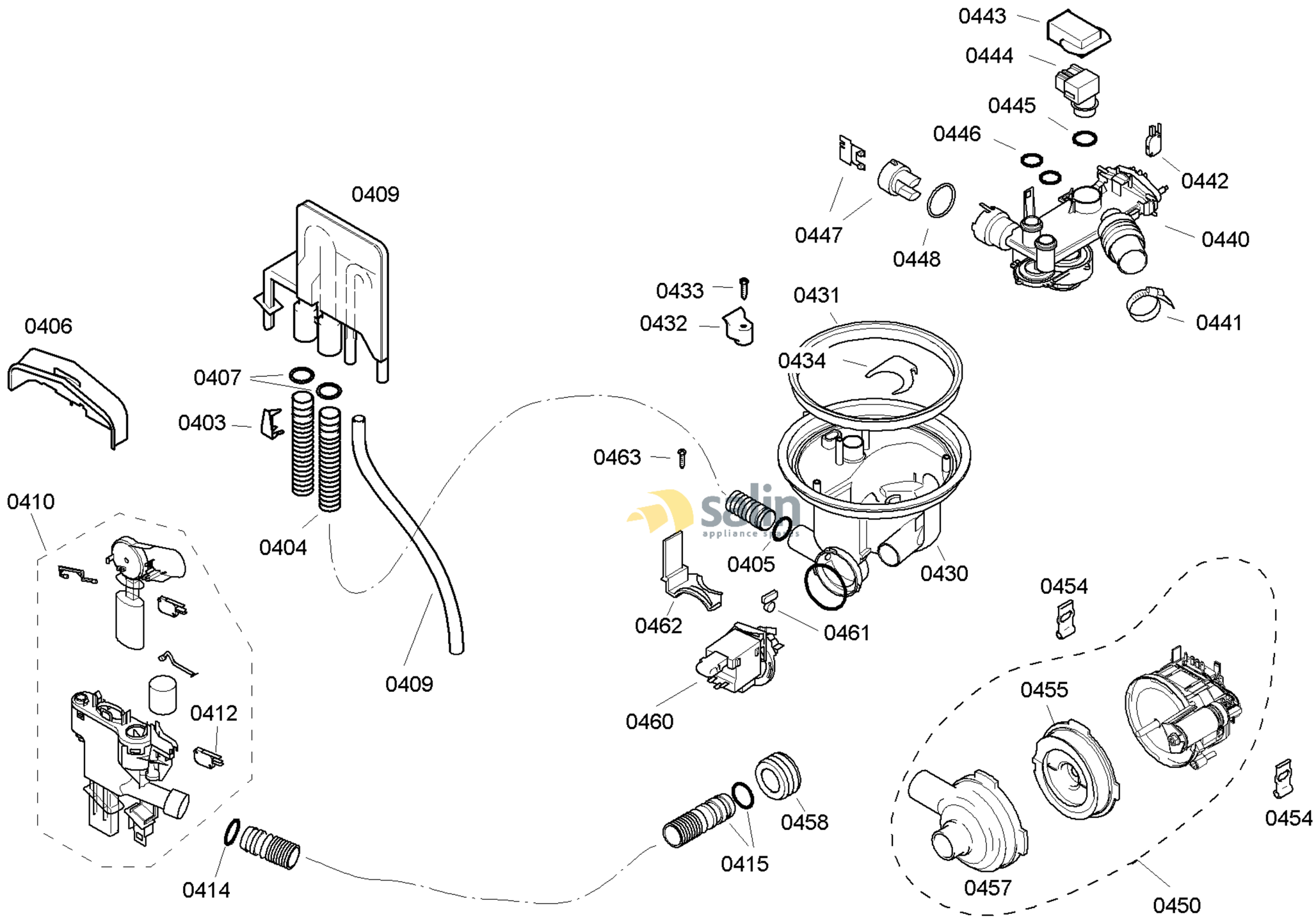

58300000122823 aet 000 a 4/6

FAMILY : SGV45E03UC
MODEL NO: SGV45E03UC/01
Check Position No/Part No or Replacement No

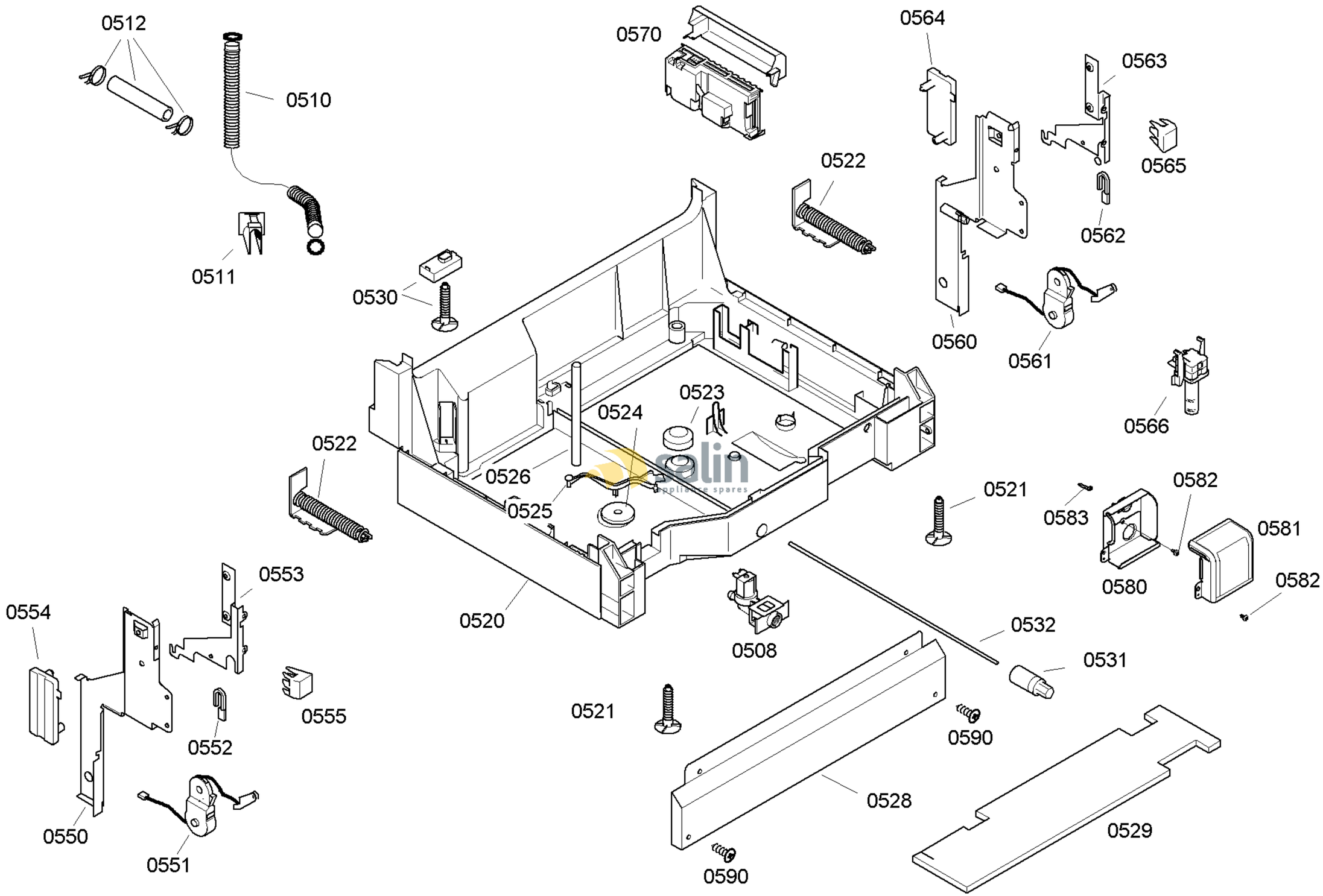

58300000122823 aet 000 a 5/6

FAMILY : SGV45E03UC
MODEL NO: SGV45E03UC/01
Check Position No/Part No or Replacement No

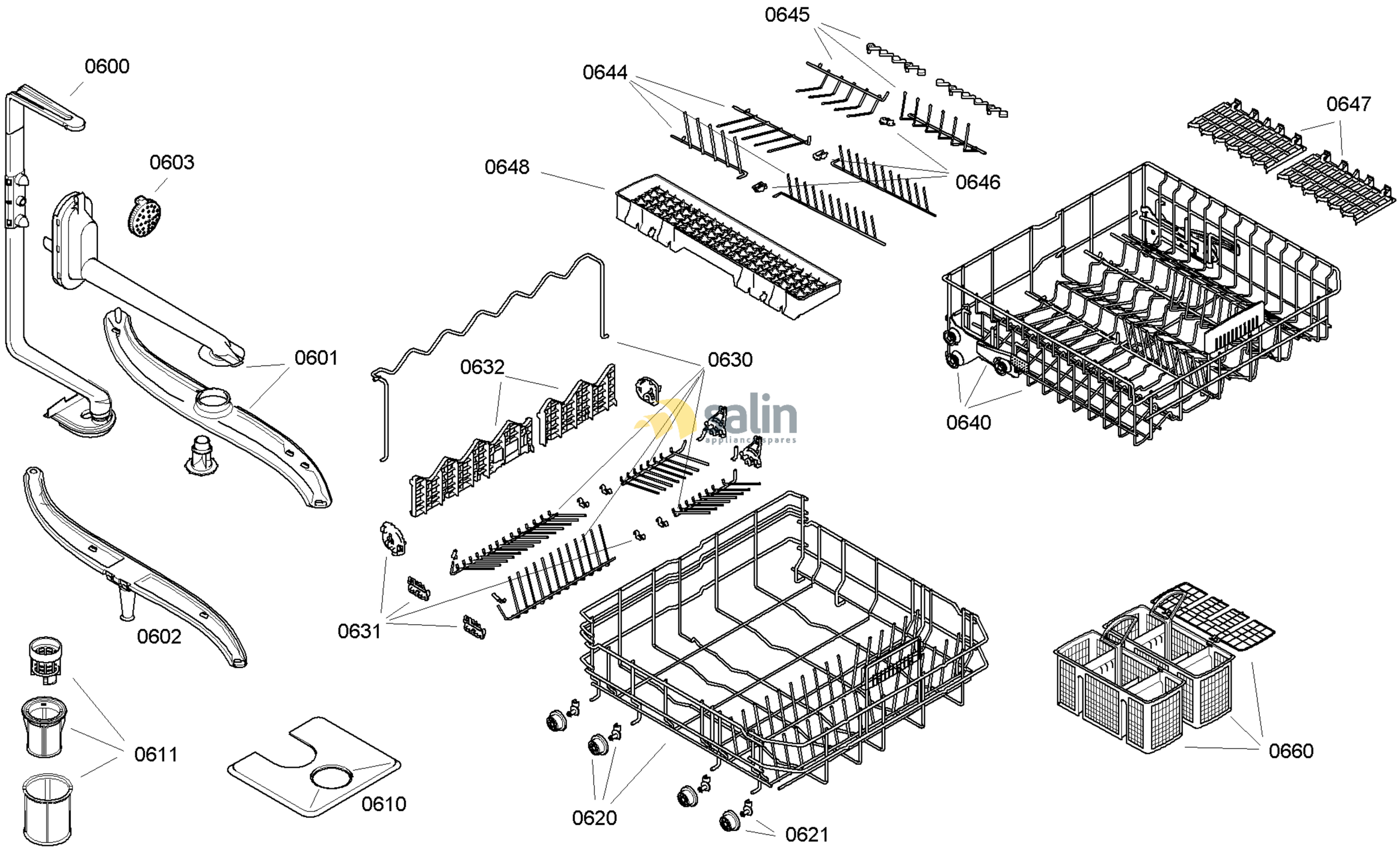

58300000122823 aet 000 a 6/6

FAMILY : SGV45E03UC
MODEL NO: SGV45E03UC/01
Check Position No/Part No or Replacement No