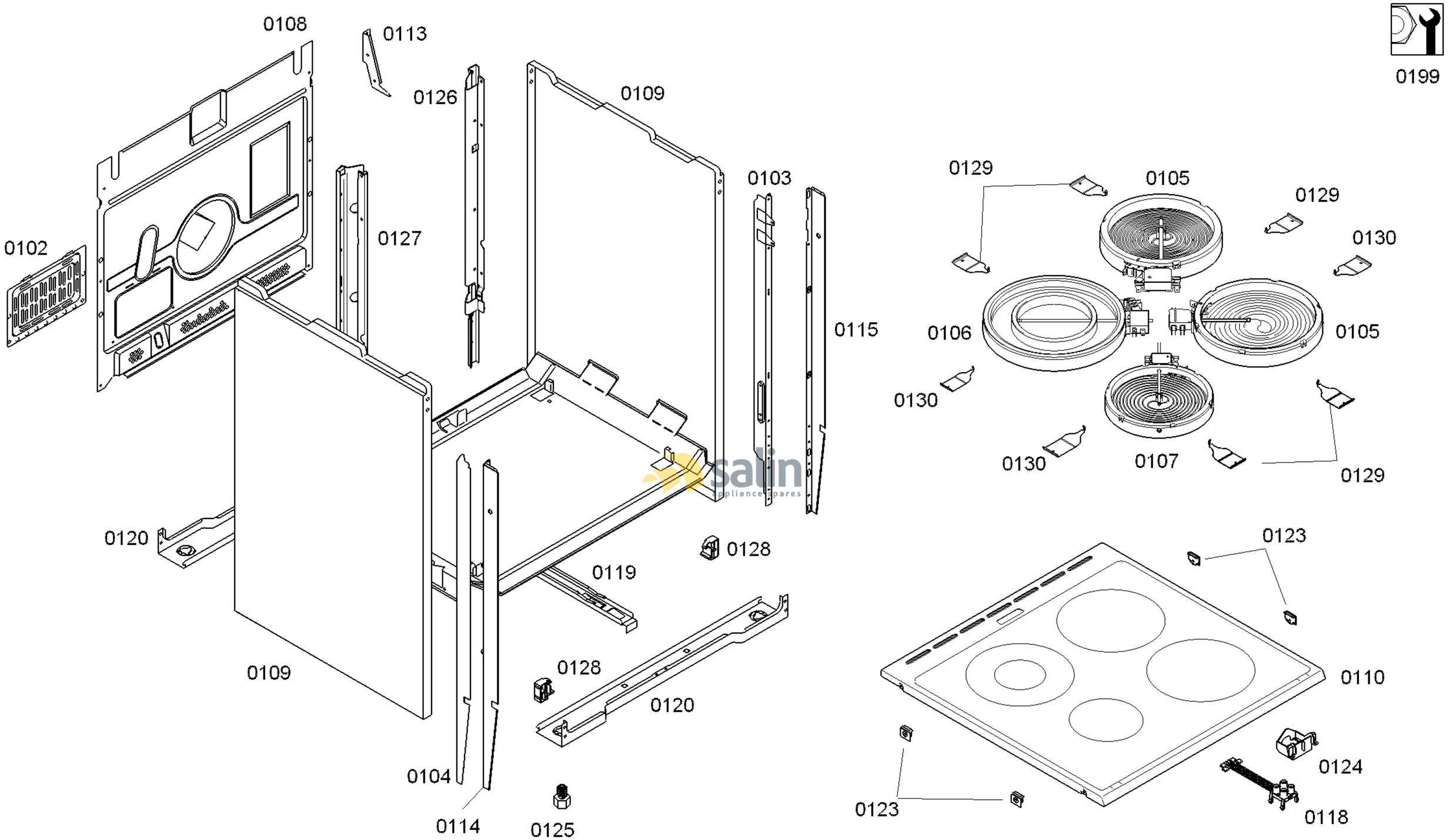

58300000170044 aet 000 a 1/6

FAMILY : HCE743220F
MODEL NO: HCE743220F/47
Check Position No/Part No or Replacement No

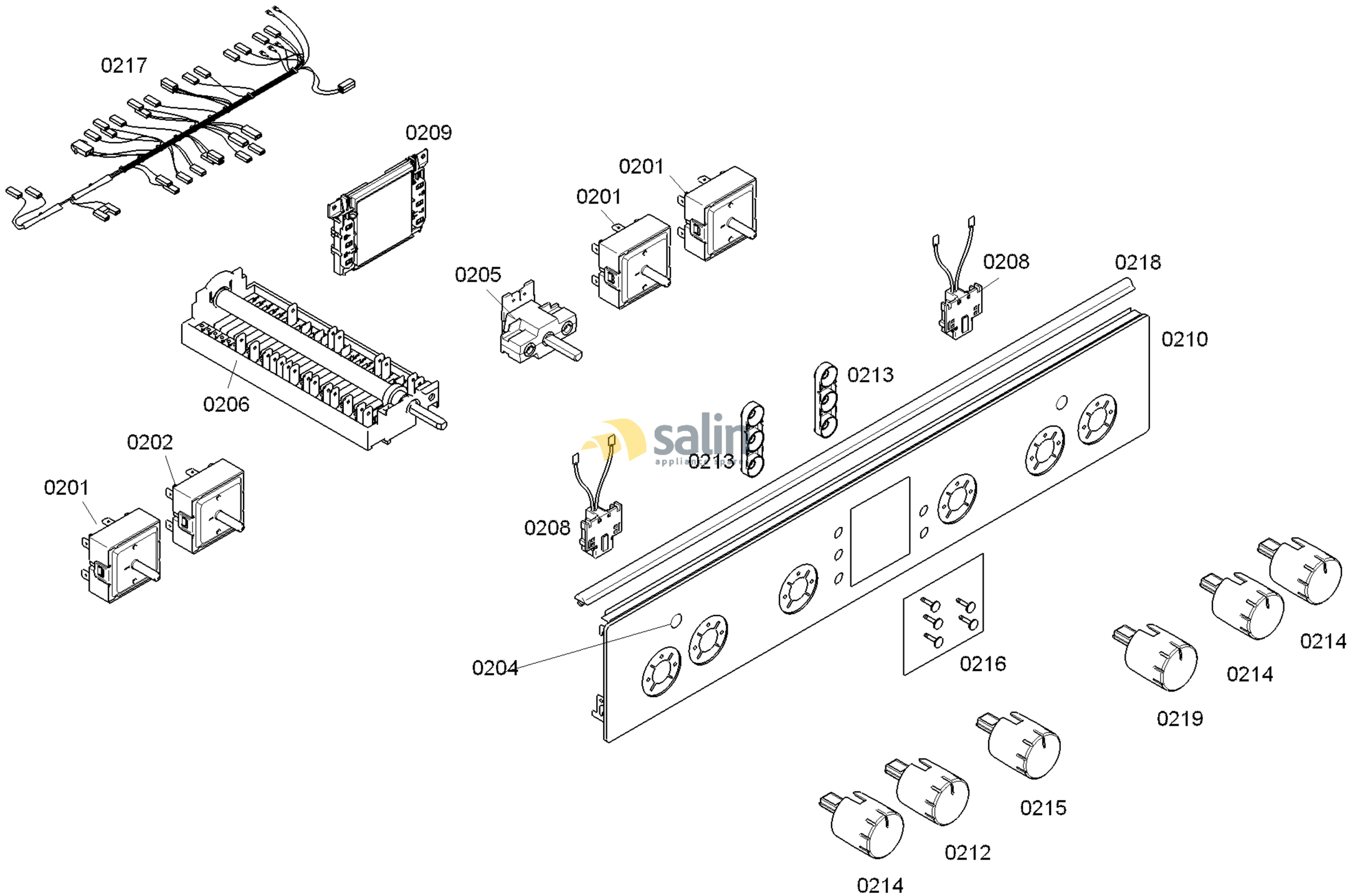

58300000170044 aet 000 a 2/6

FAMILY : HCE743220F
MODEL NO: HCE743220F/47
Check Position No/Part No or Replacement No

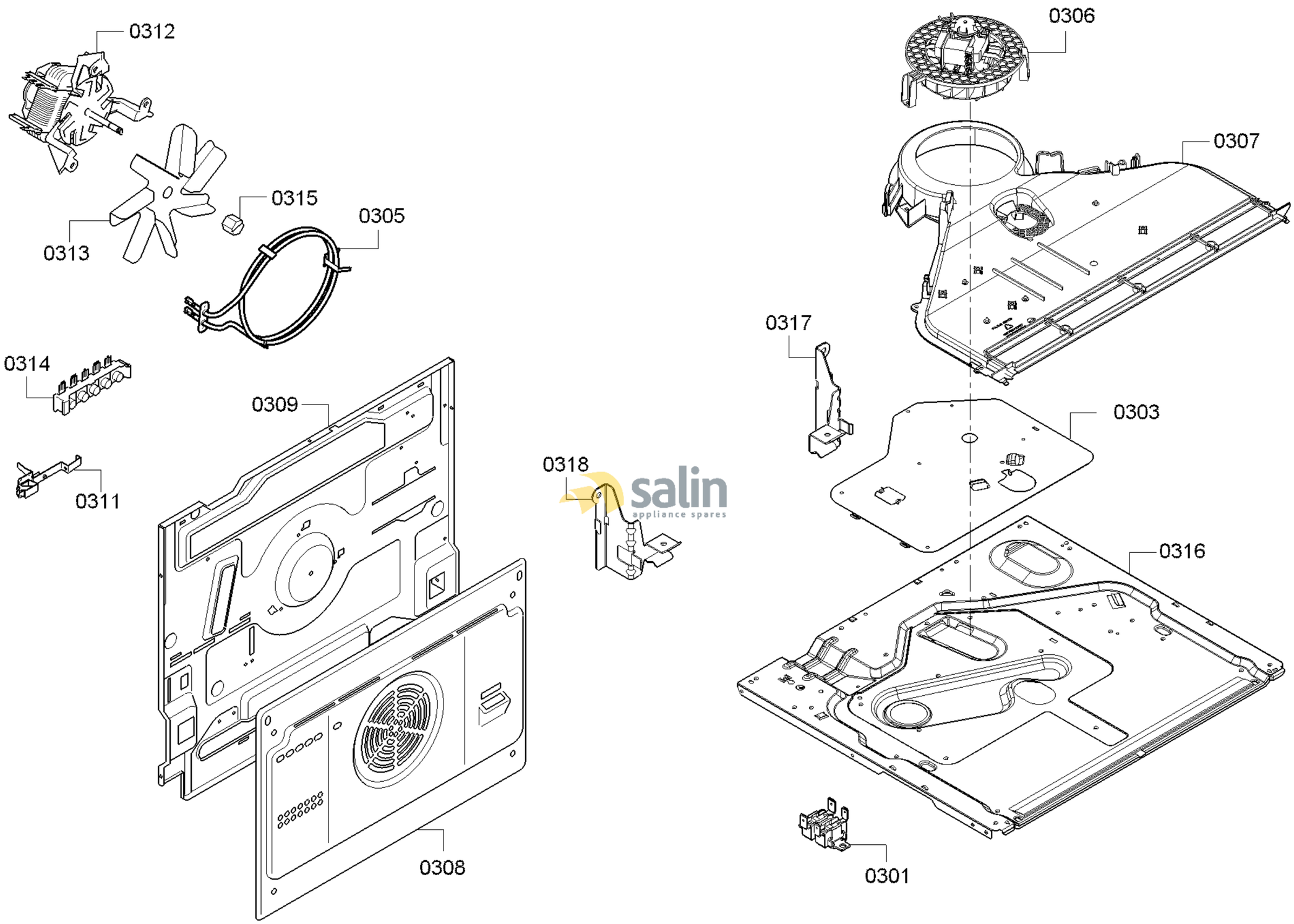

58300000170044 aet 000 a 3/6

FAMILY : HCE743220F
MODEL NO: HCE743220F/47
Check Position No/Part No or Replacement No

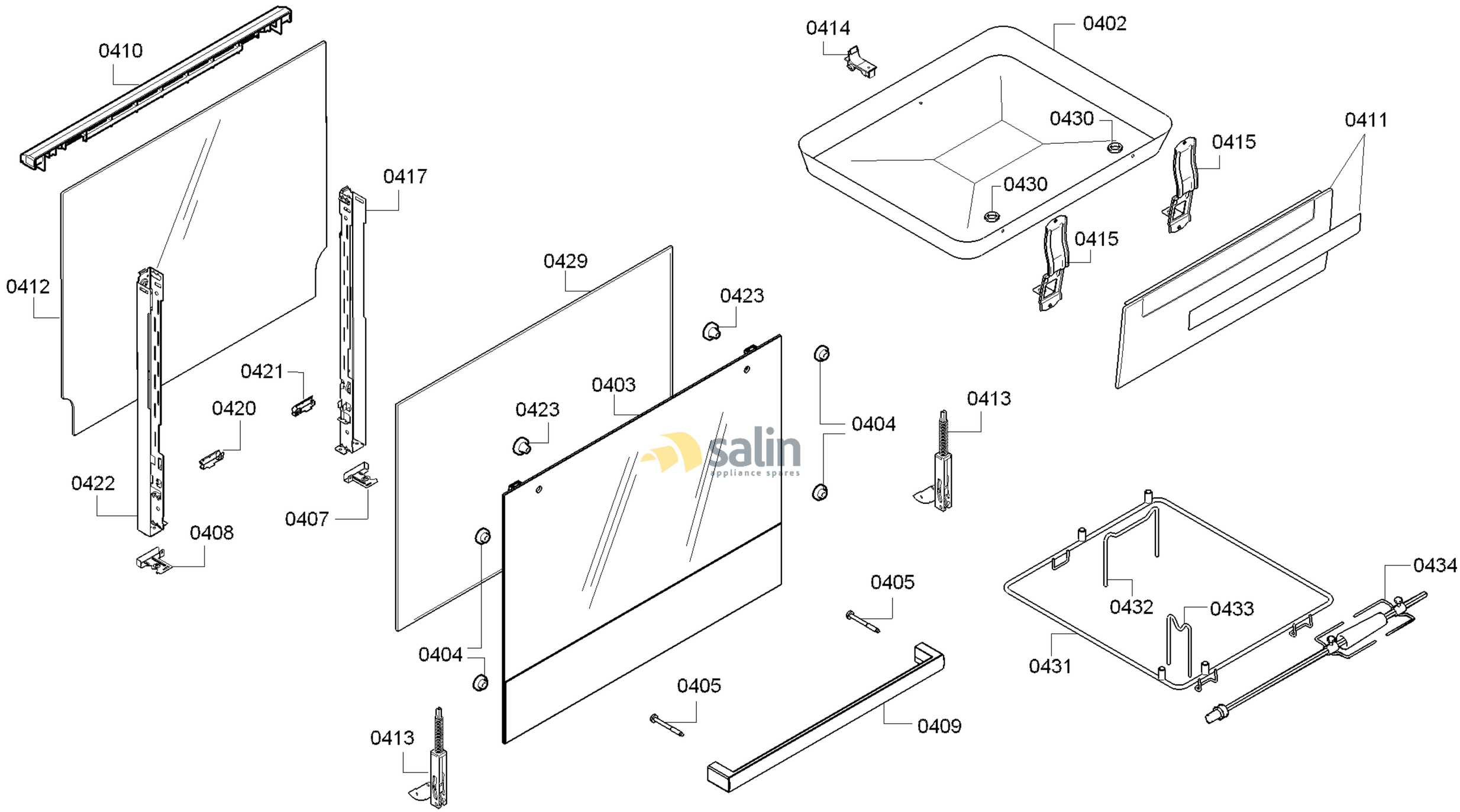

58300000170044 aet 000 a 4/6

FAMILY : HCE743220F
MODEL NO: HCE743220F/47
Check Position No/Part No or Replacement No

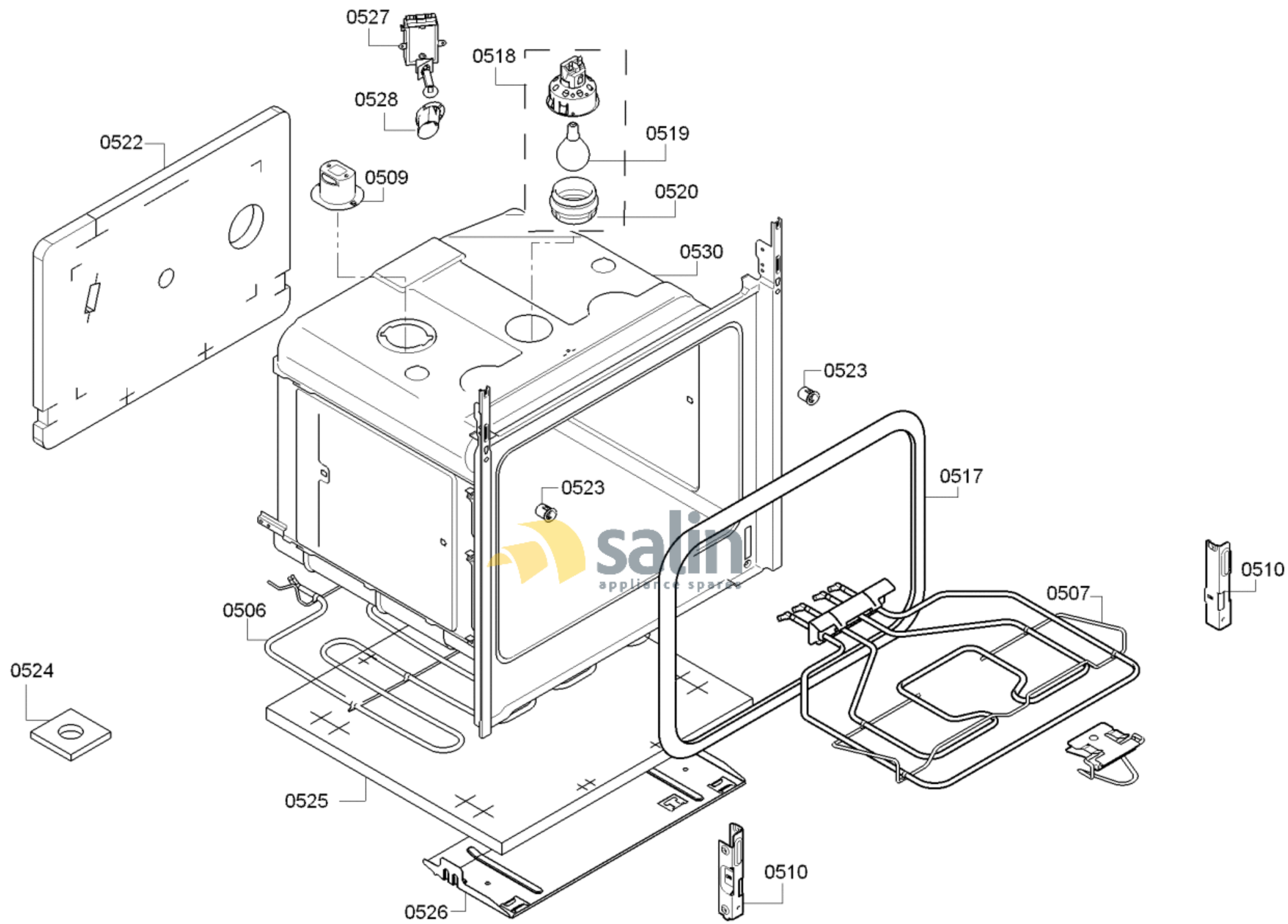

58300000170044 aet 000 a 5/6

FAMILY : HCE743220F

MODEL NO: HCE743220F/47

Check Position No/Part No or Replacement No

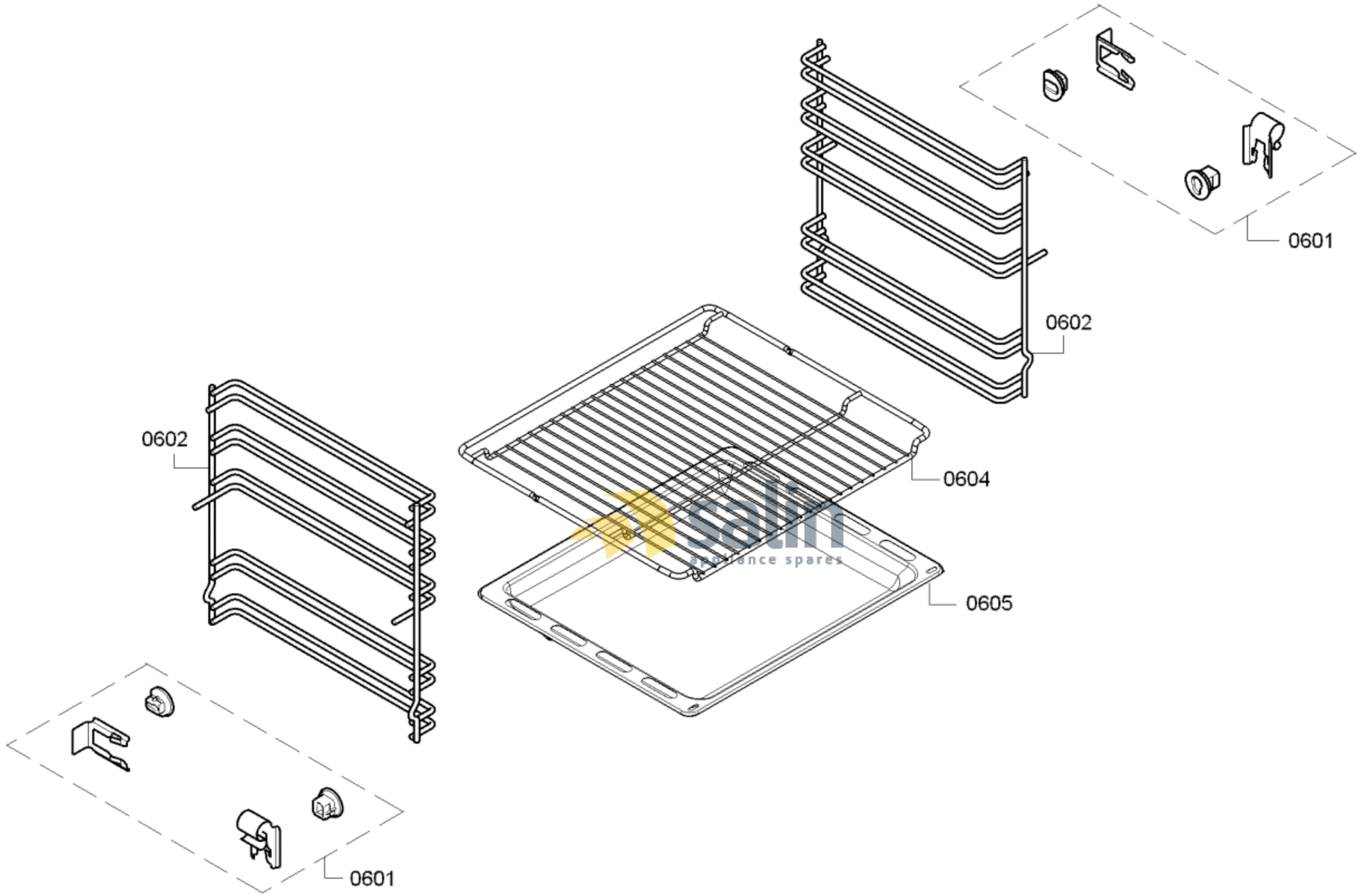

58300000170044 aet 000 a 6/6

FAMILY : HCE743220F

MODEL NO: HCE743220F/47

Check Position No/Part No or Replacement No