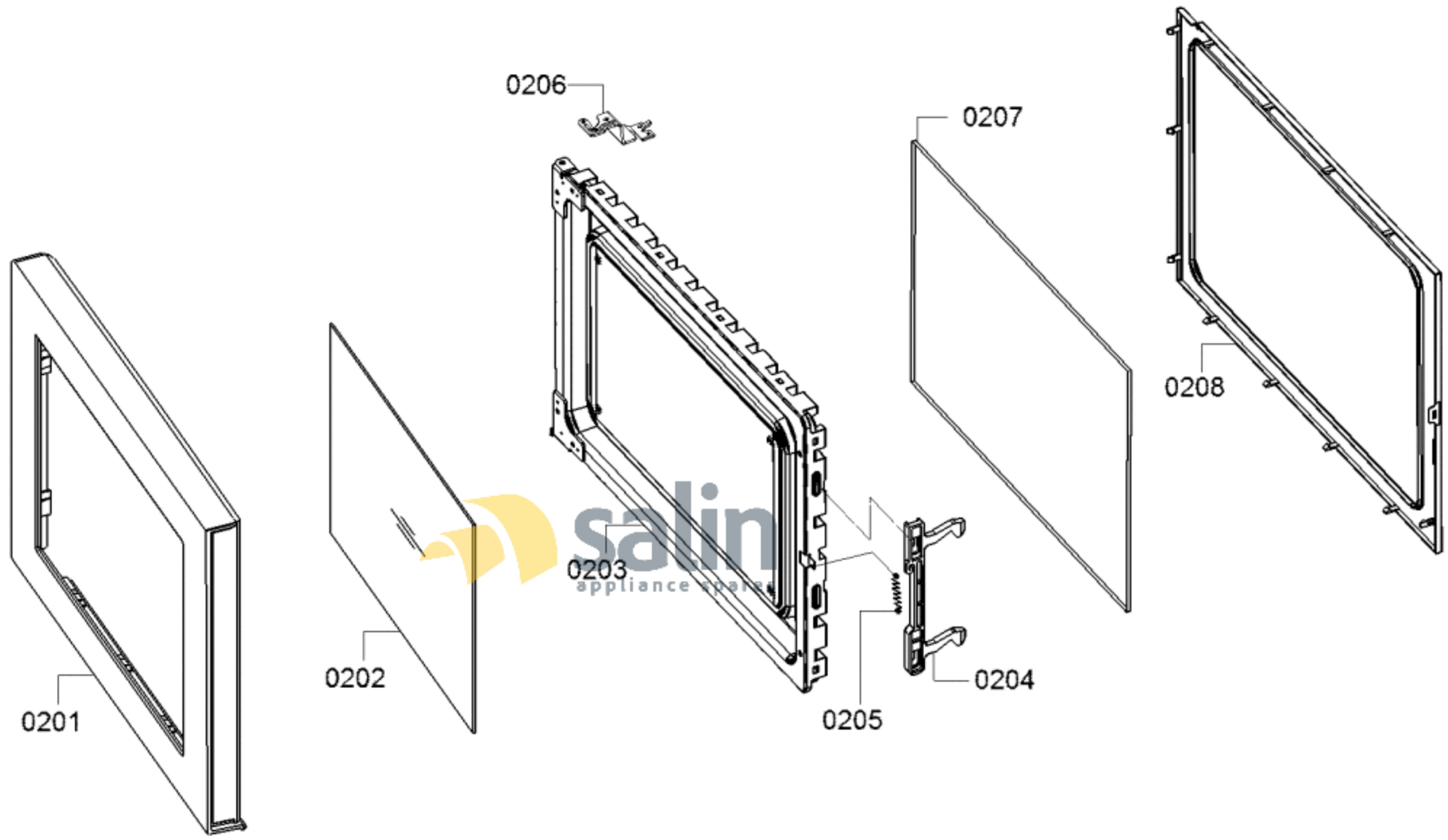

58300000157696 aet 000 b 2/3

FAMILY : HMT84G651V

MODEL NO: HMT84G651V/01

Check Position No/Part No or Replacement No

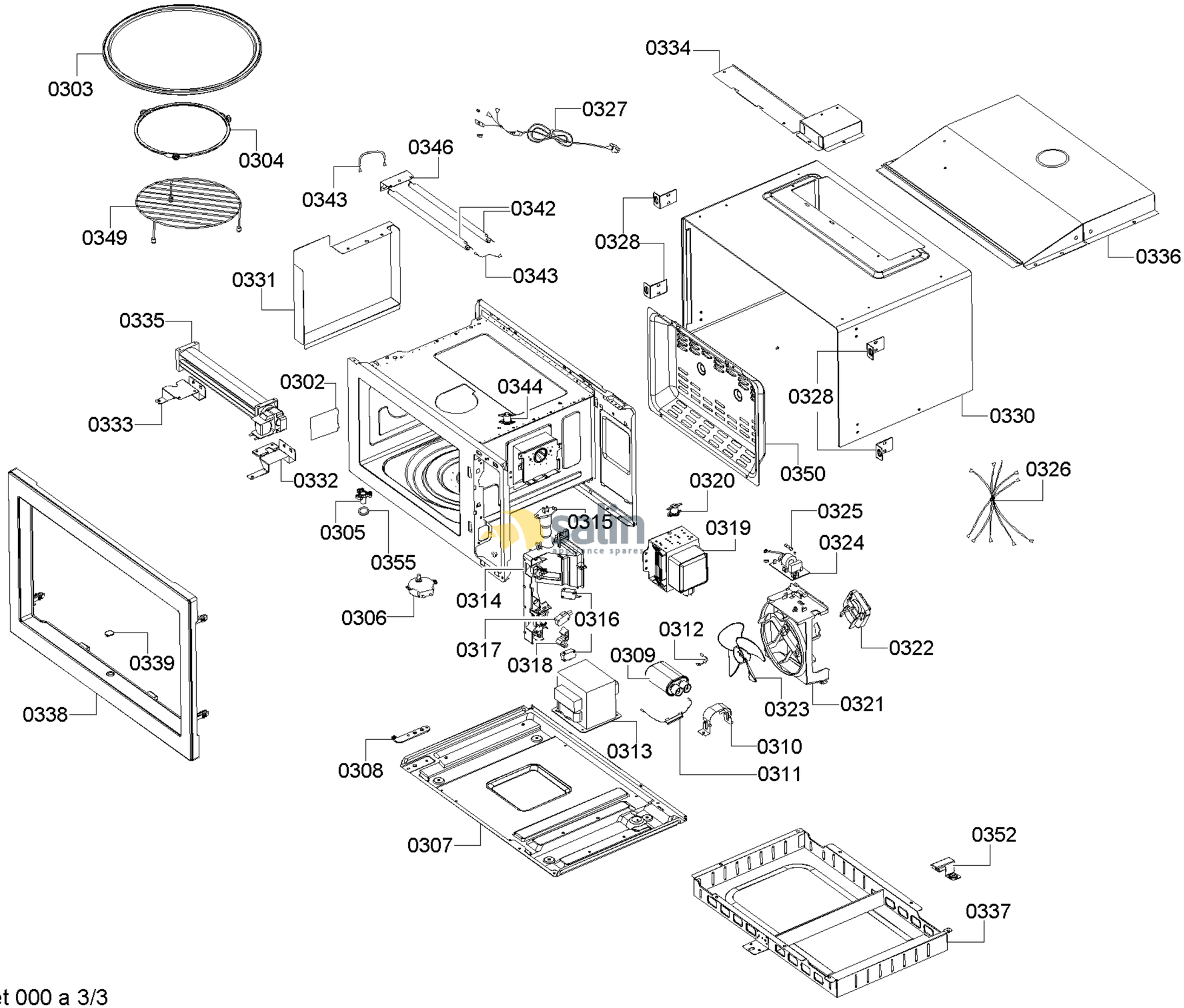

58300000157696 aet 000 a 3/3

FAMILY : HMT84G651V
MODEL NO: HMT84G651V/01
Check Position No/Part No or Replacement No

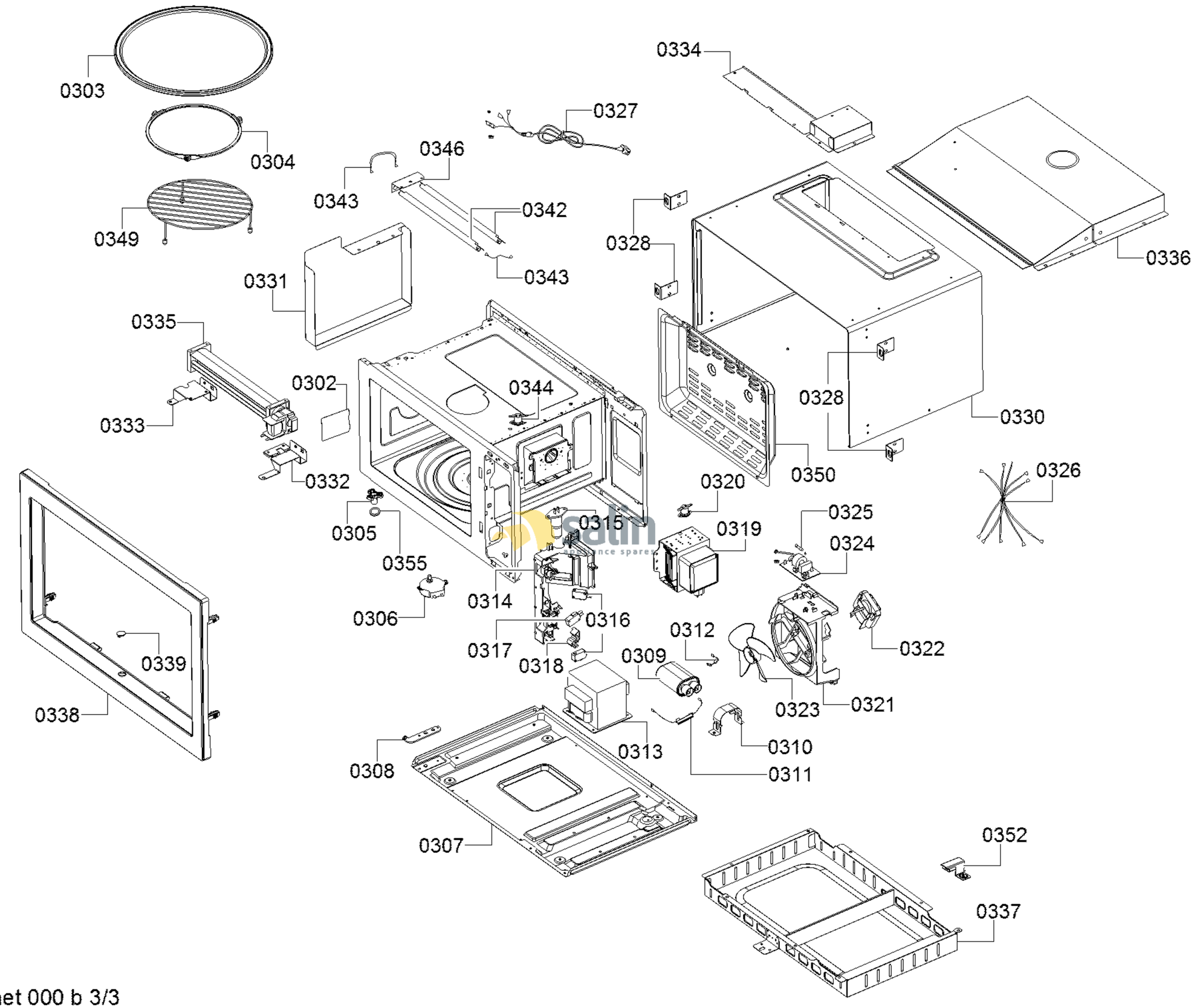

58300000157696 aet 000 b 3/3

FAMILY : HMT84G651V
MODEL NO: HMT84G651V/01
Check Position No/Part No or Replacement No