0199

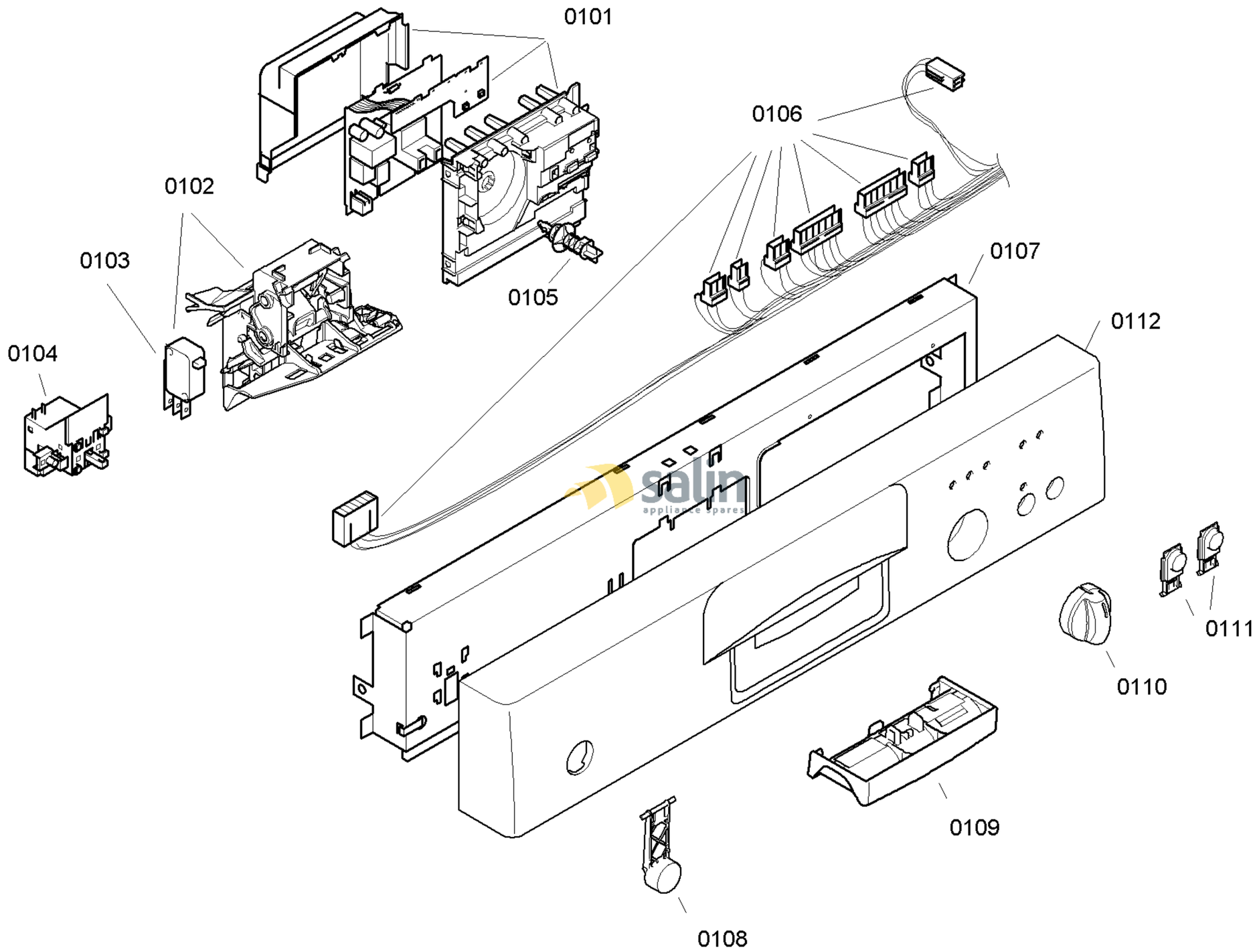

58300000130458 aet 000 a 1/6

FAMILY : SGS53E12FF
MODEL NO: SGS53E12FF/86
Check Position No/Part No or Replacement No

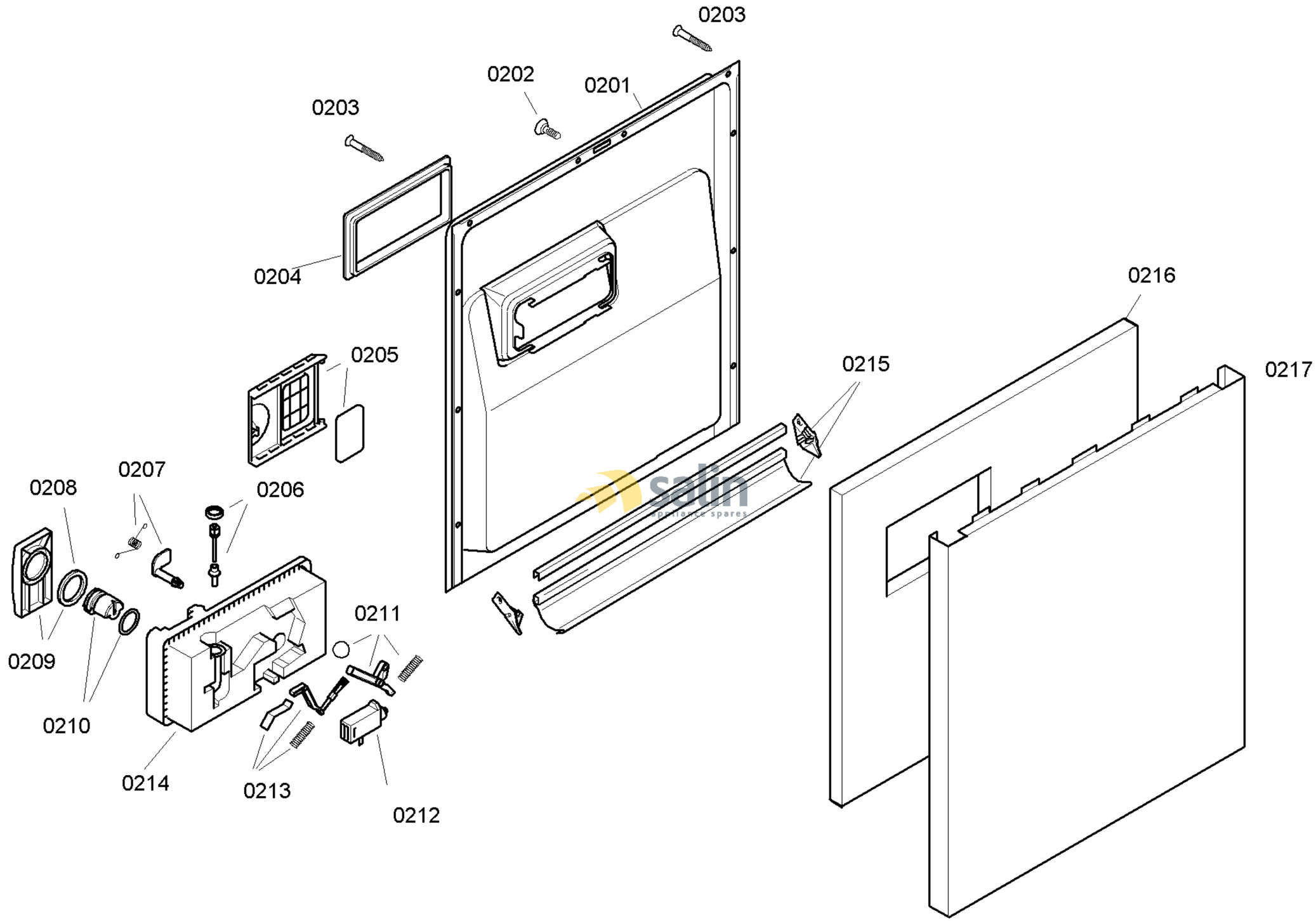

58300000130458 aet 000 a 2/6

FAMILY : SGS53E12FF
MODEL NO: SGS53E12FF/86
Check Position No/Part No or Replacement No

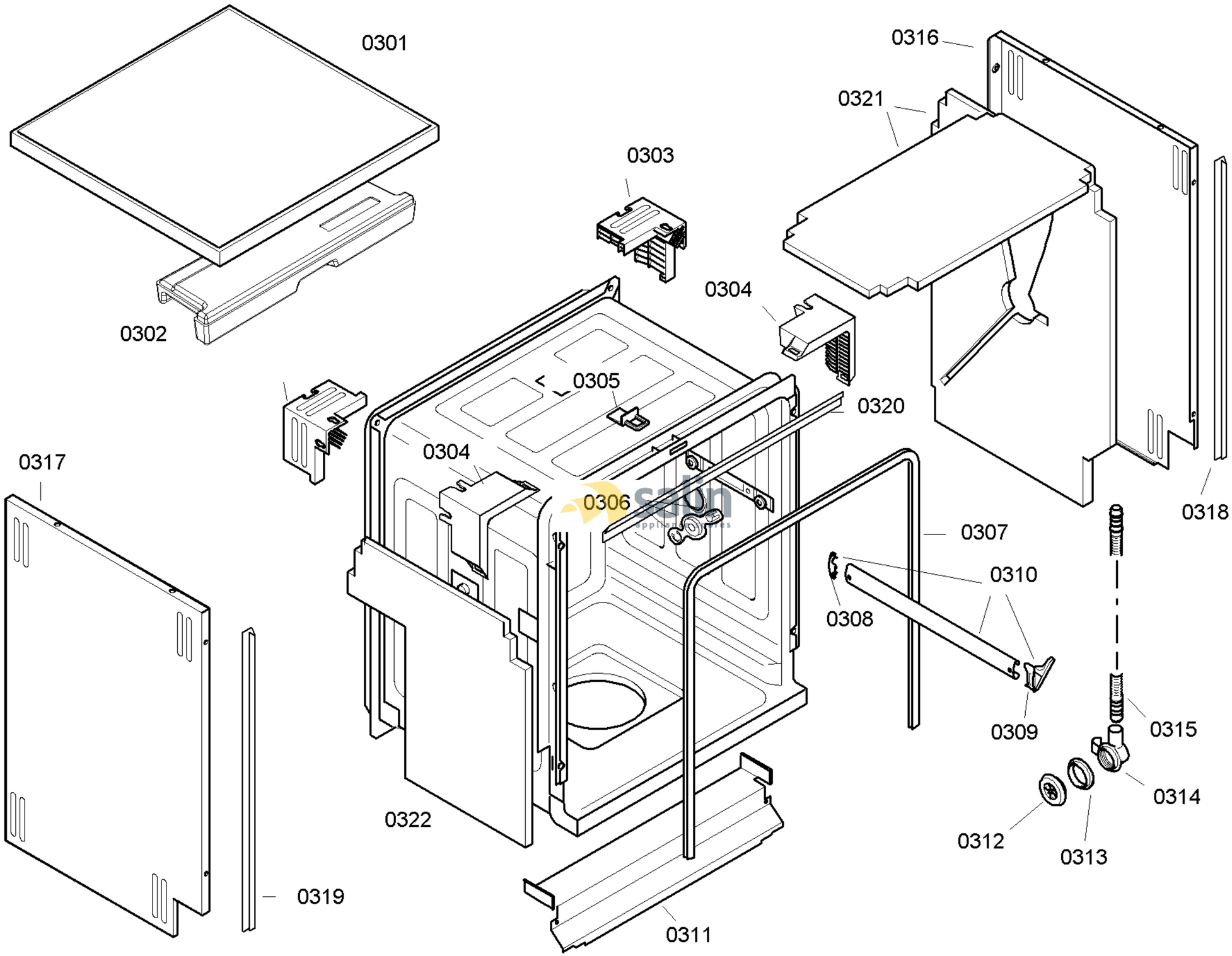

58300000130458 aet 000 a 3/6

FAMILY : SGS53E12FF
MODEL NO: SGS53E12FF/86
Check Position No/Part No or Replacement No

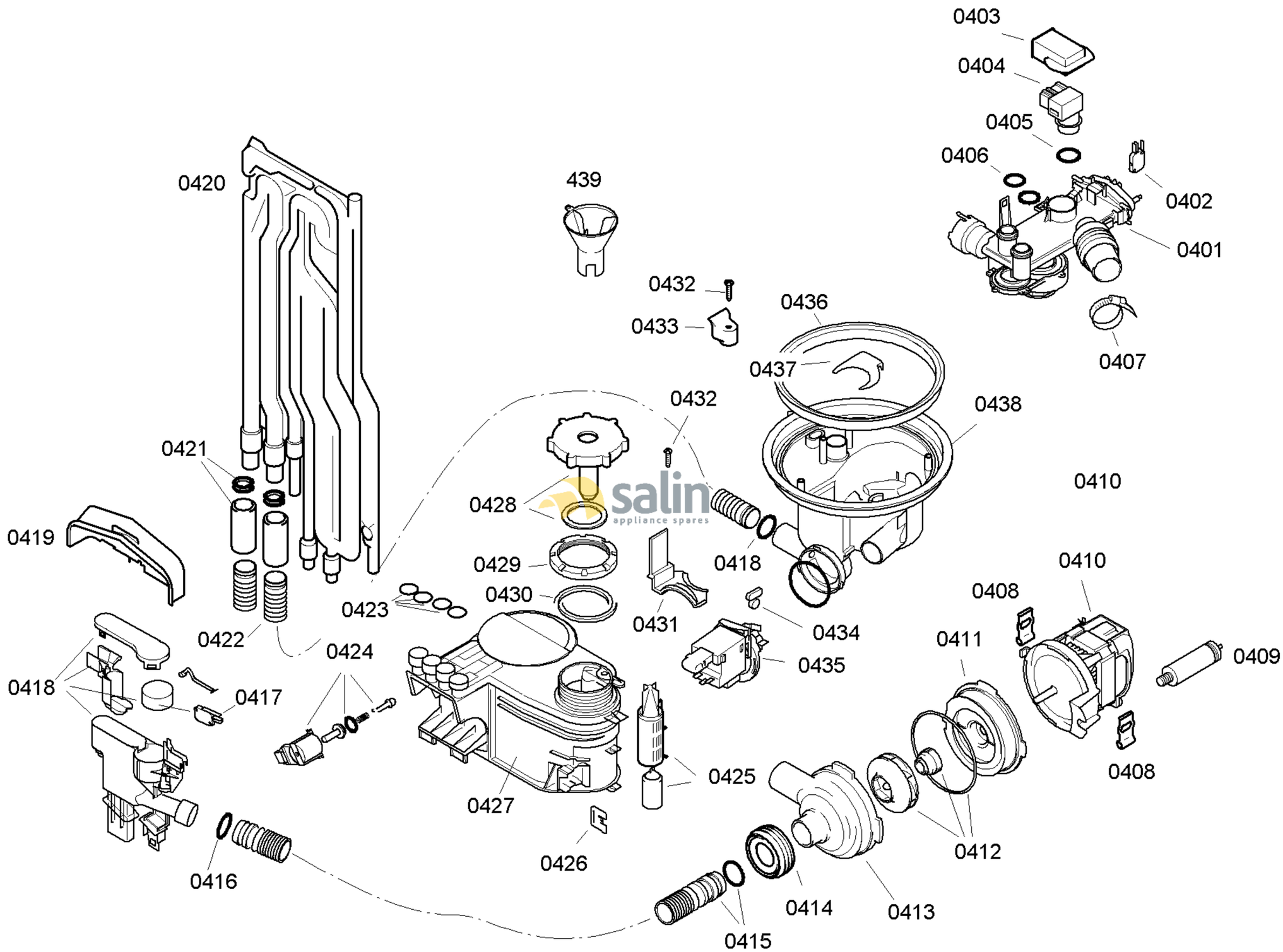

58300000130458 aet 000 a 4/6

FAMILY : SGS53E12FF
MODEL NO: SGS53E12FF/86
Check Position No/Part No or Replacement No

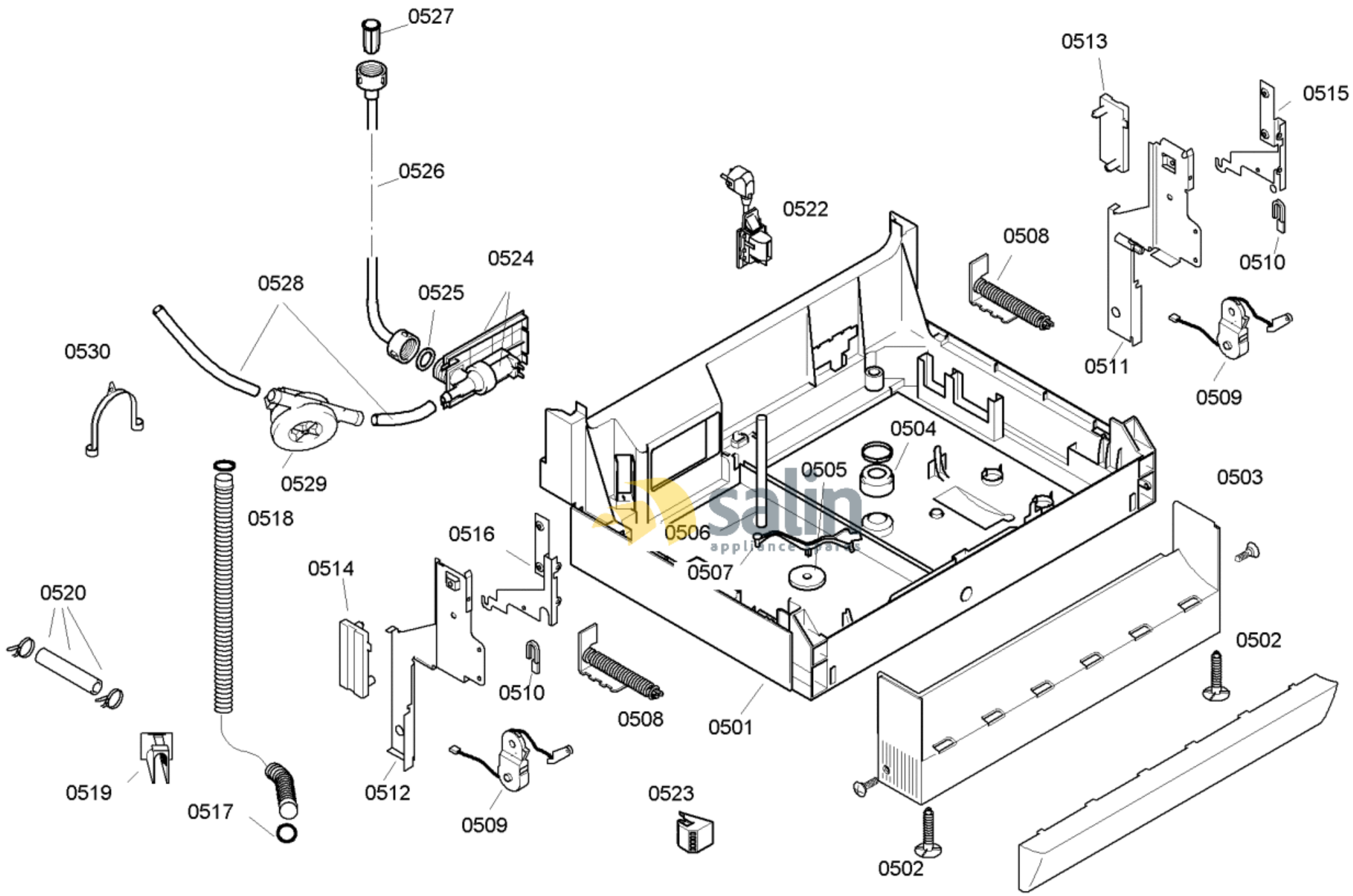

58300000130458 aet 000 a 5/6

FAMILY : SGS53E12FF

MODEL NO: SGS53E12FF/86

Check Position No/Part No or Replacement No

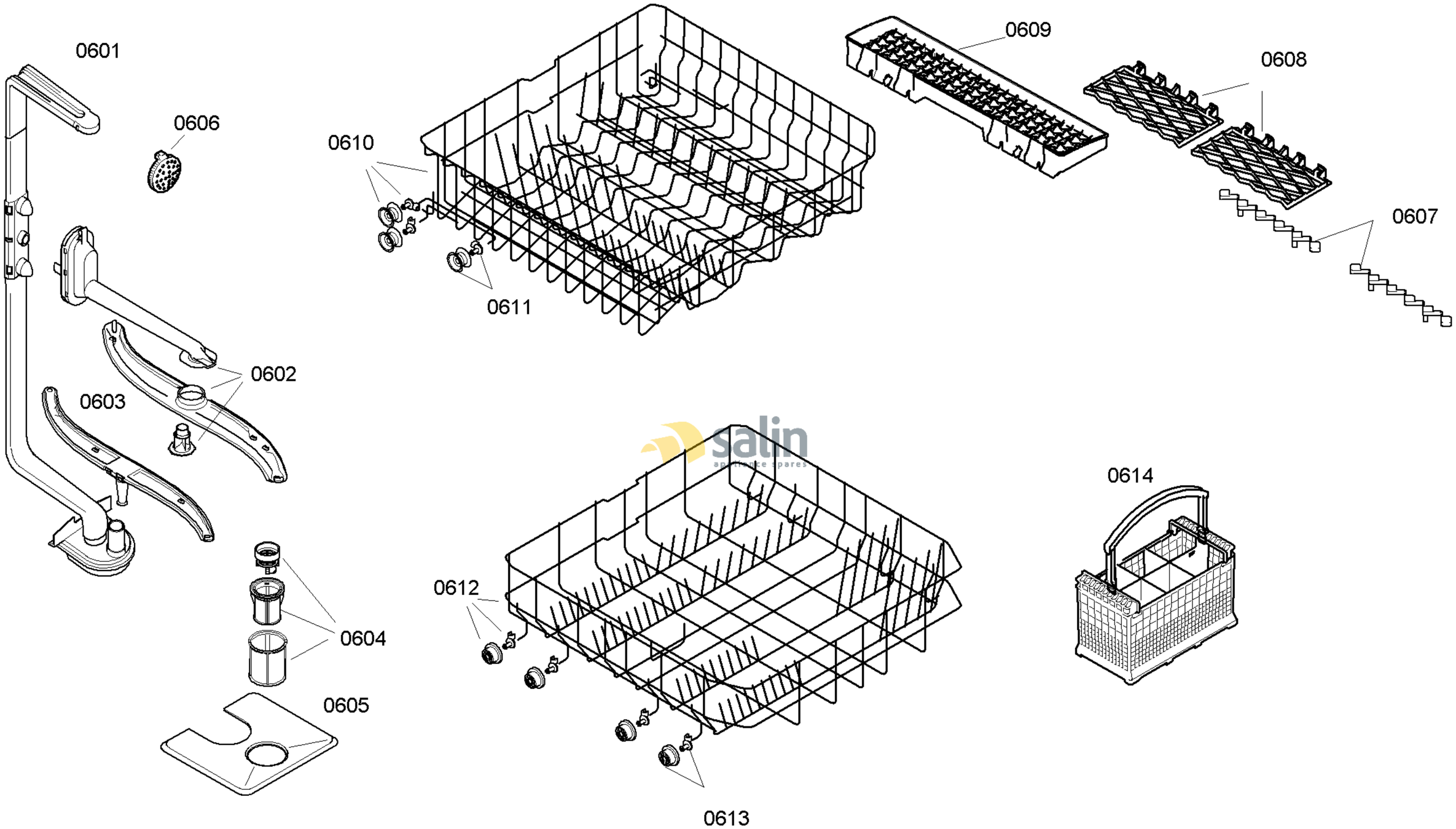

58300000130458 aet 000 a 6/6

FAMILY : SGS53E12FF
MODEL NO: SGS53E12FF/86
Check Position No/Part No or Replacement No