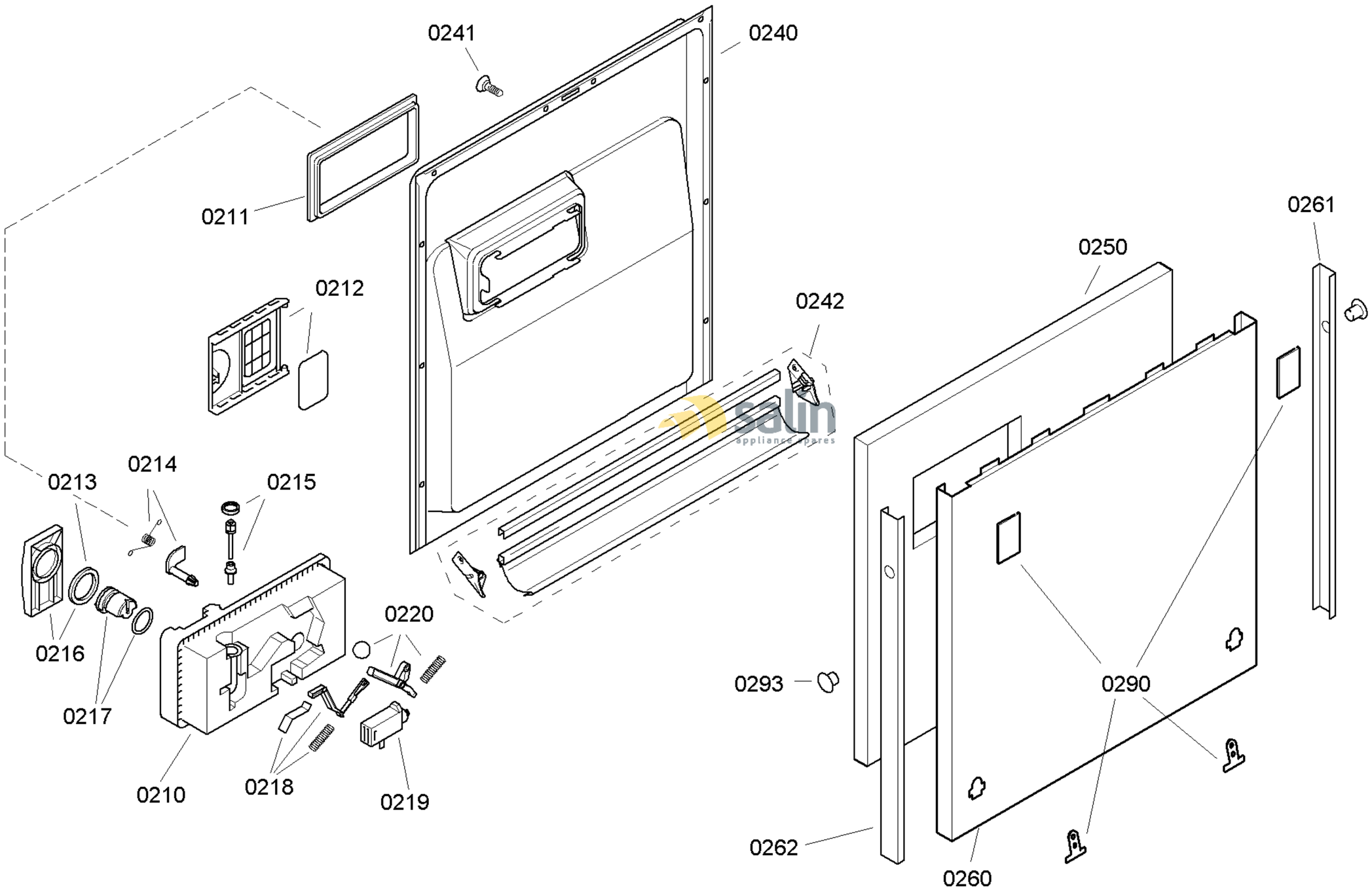

58300000132237 aet 000 a 2/6

FAMILY : SGV57T23EU
MODEL NO: SGV57T23EU/13
Check Position No/Part No or Replacement No

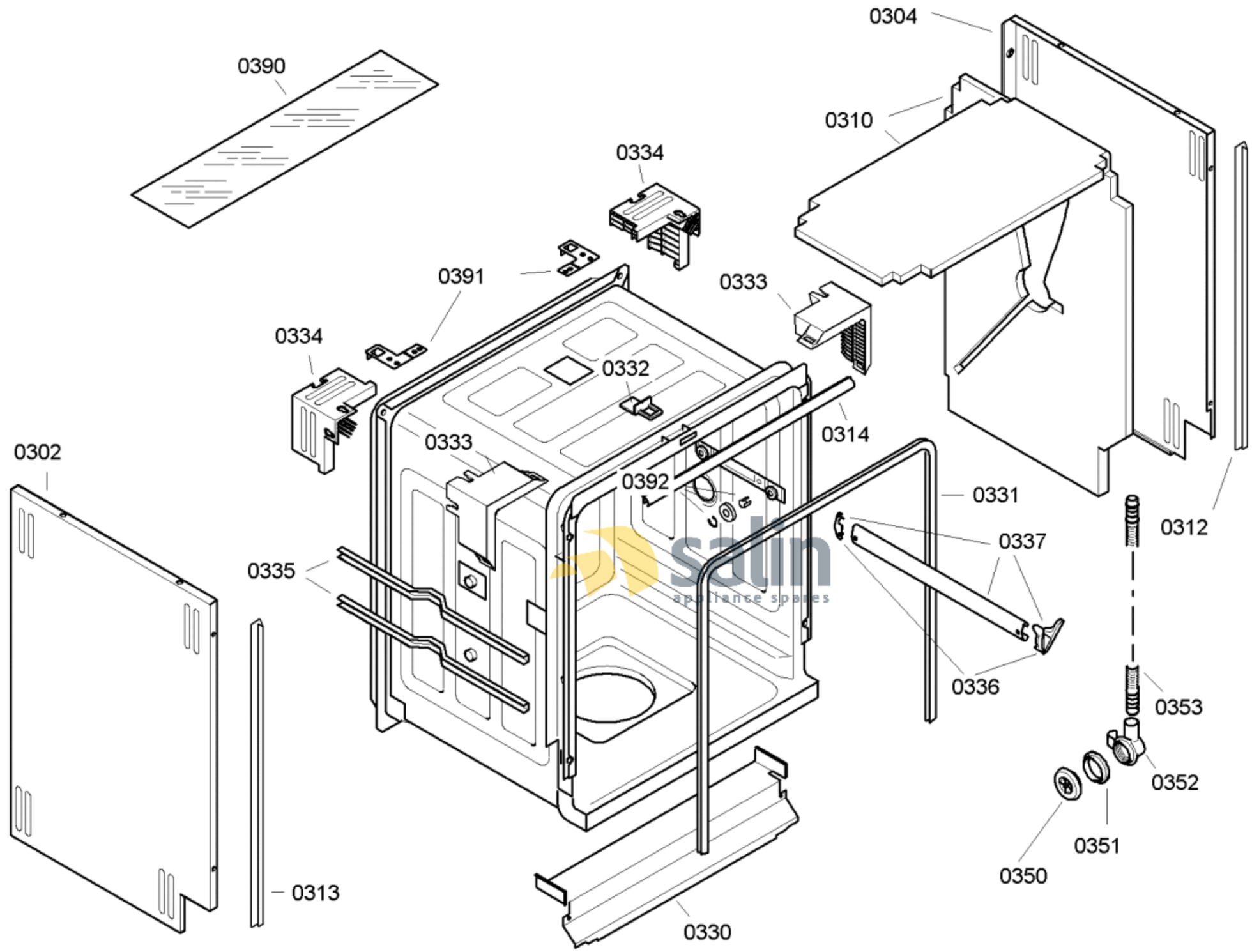

58300000132237 aet 000 a 3/6

FAMILY : SGV57T23EU

MODEL NO: SGV57T23EU/13

Check Position No/Part No or Replacement No

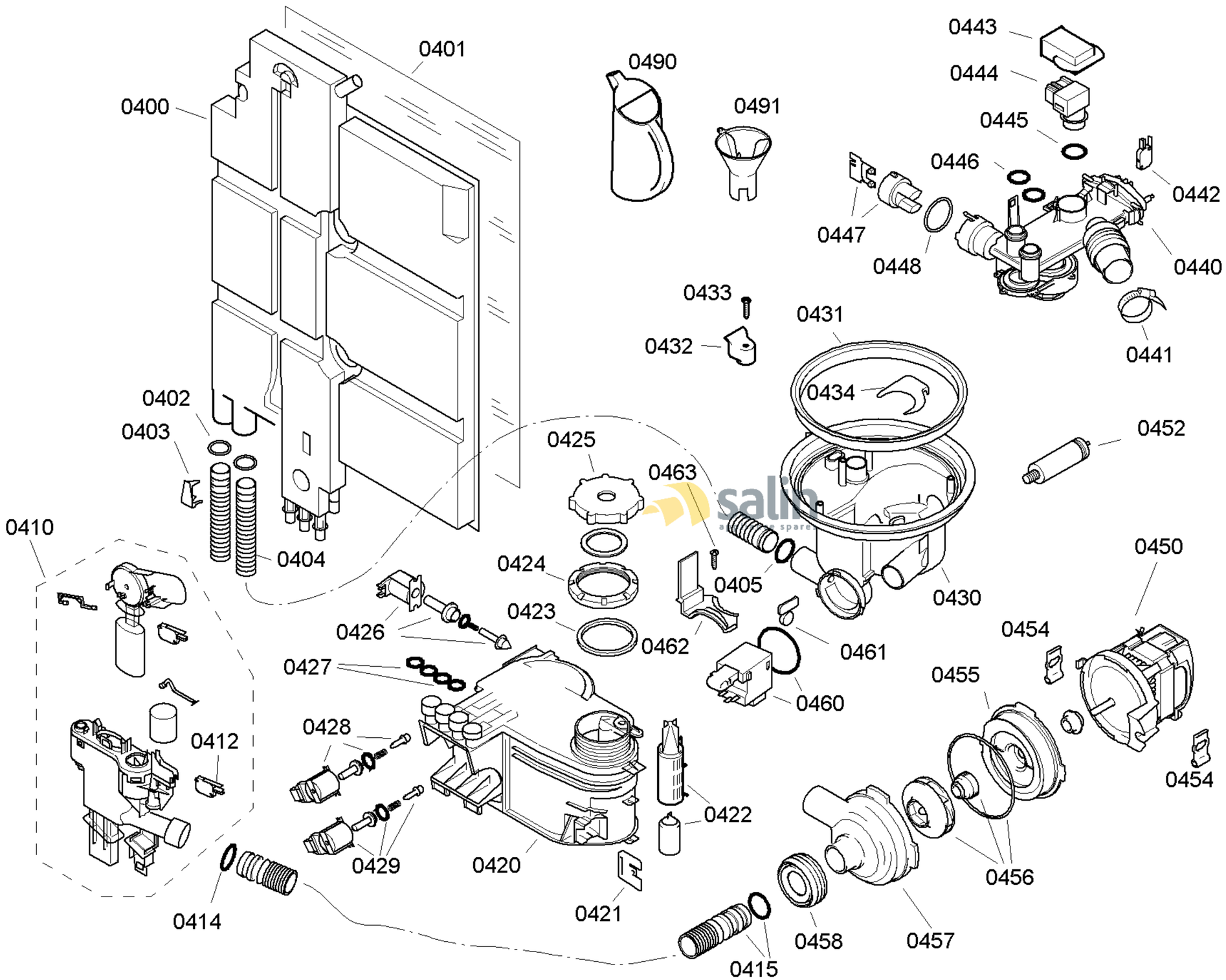

58300000132237 aet 000 a 4/6

FAMILY : SGV57T23EU
MODEL NO: SGV57T23EU/13
Check Position No/Part No or Replacement No

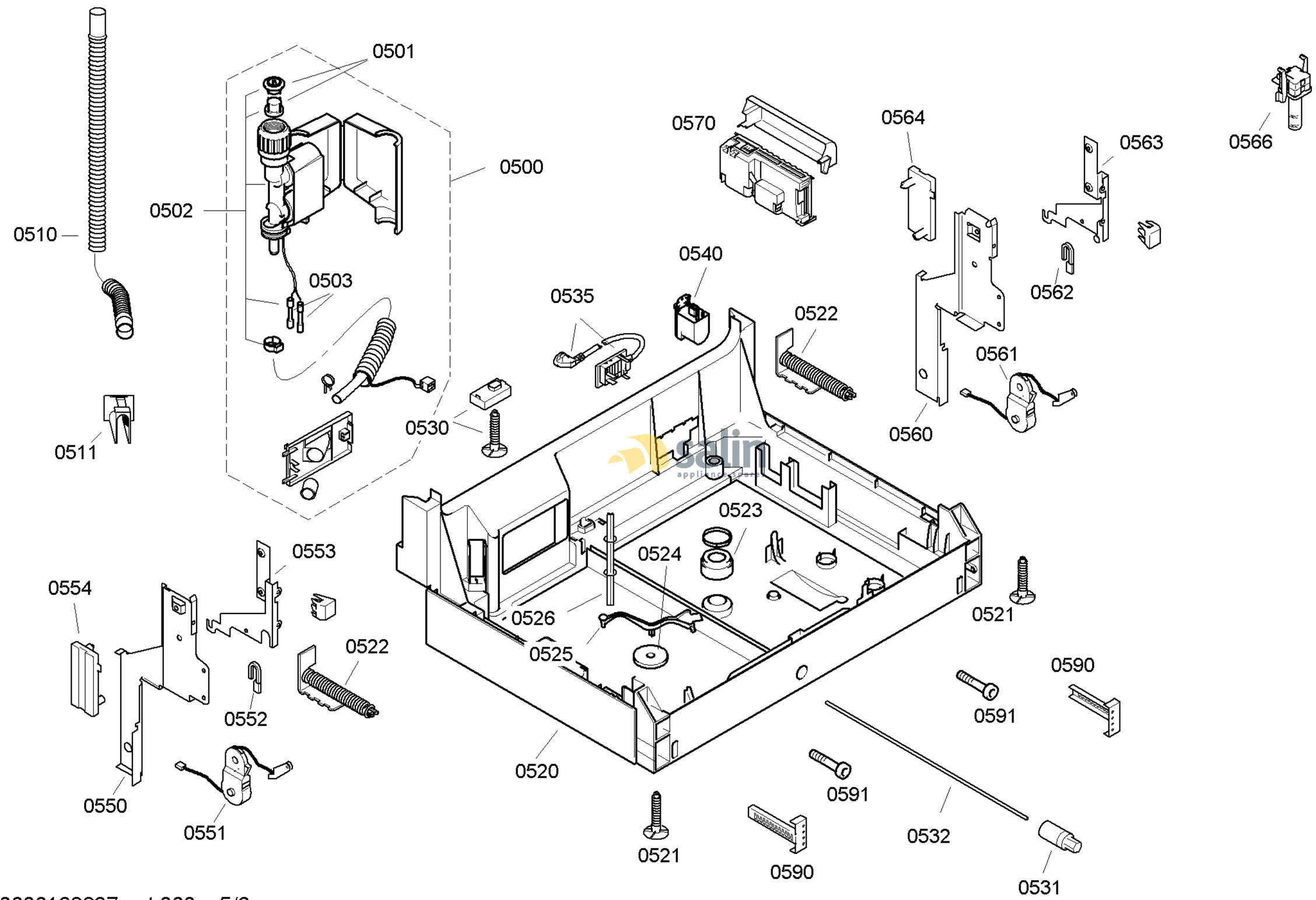

58300000132237 aet 000 a 5/6

FAMILY : SGV57T23EU
MODEL NO: SGV57T23EU/13
Check Position No/Part No or Replacement No

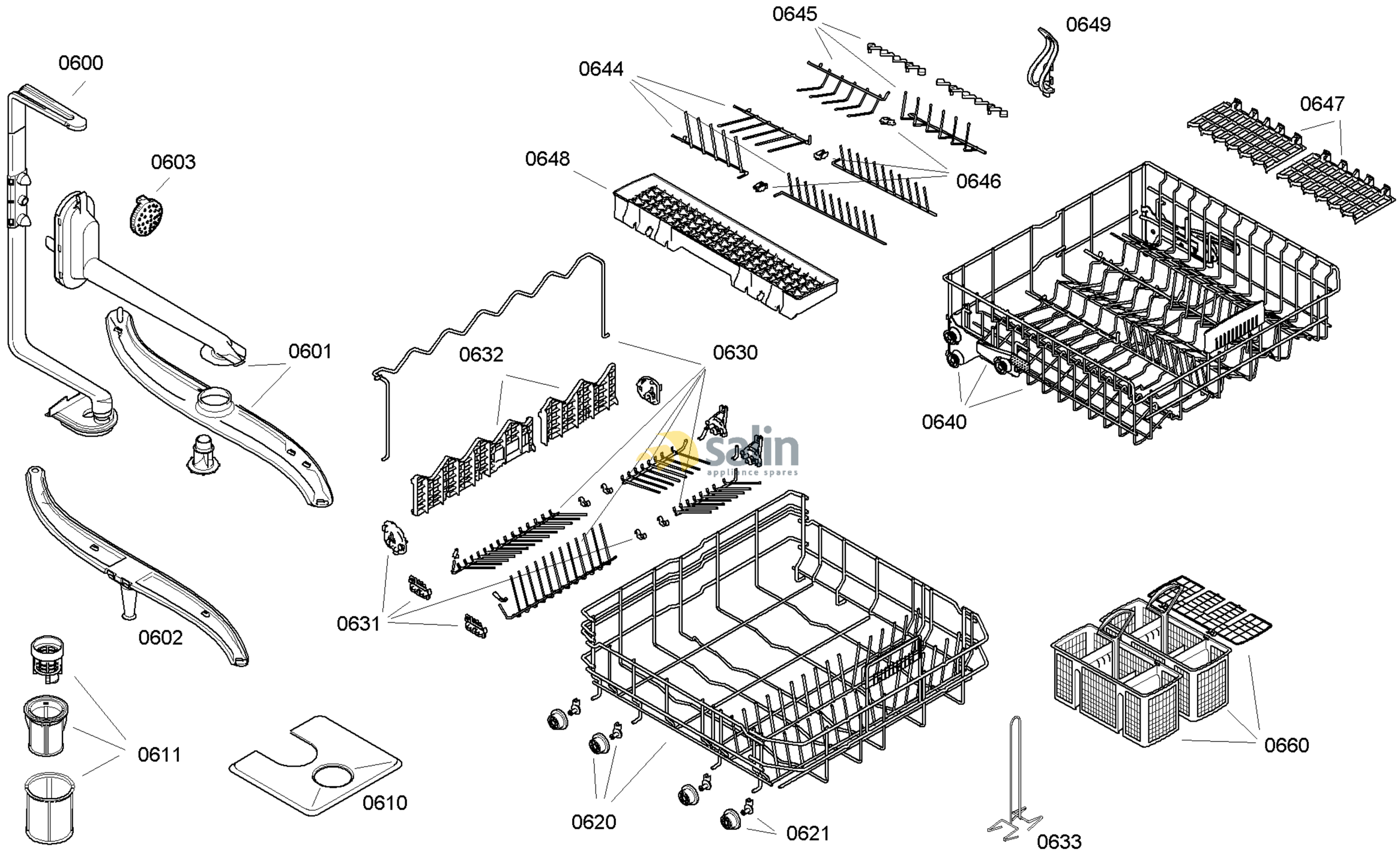

58300000132237 aet 000 a 6/6

FAMILY : SGV57T23EU
MODEL NO: SGV57T23EU/13
Check Position No/Part No or Replacement No