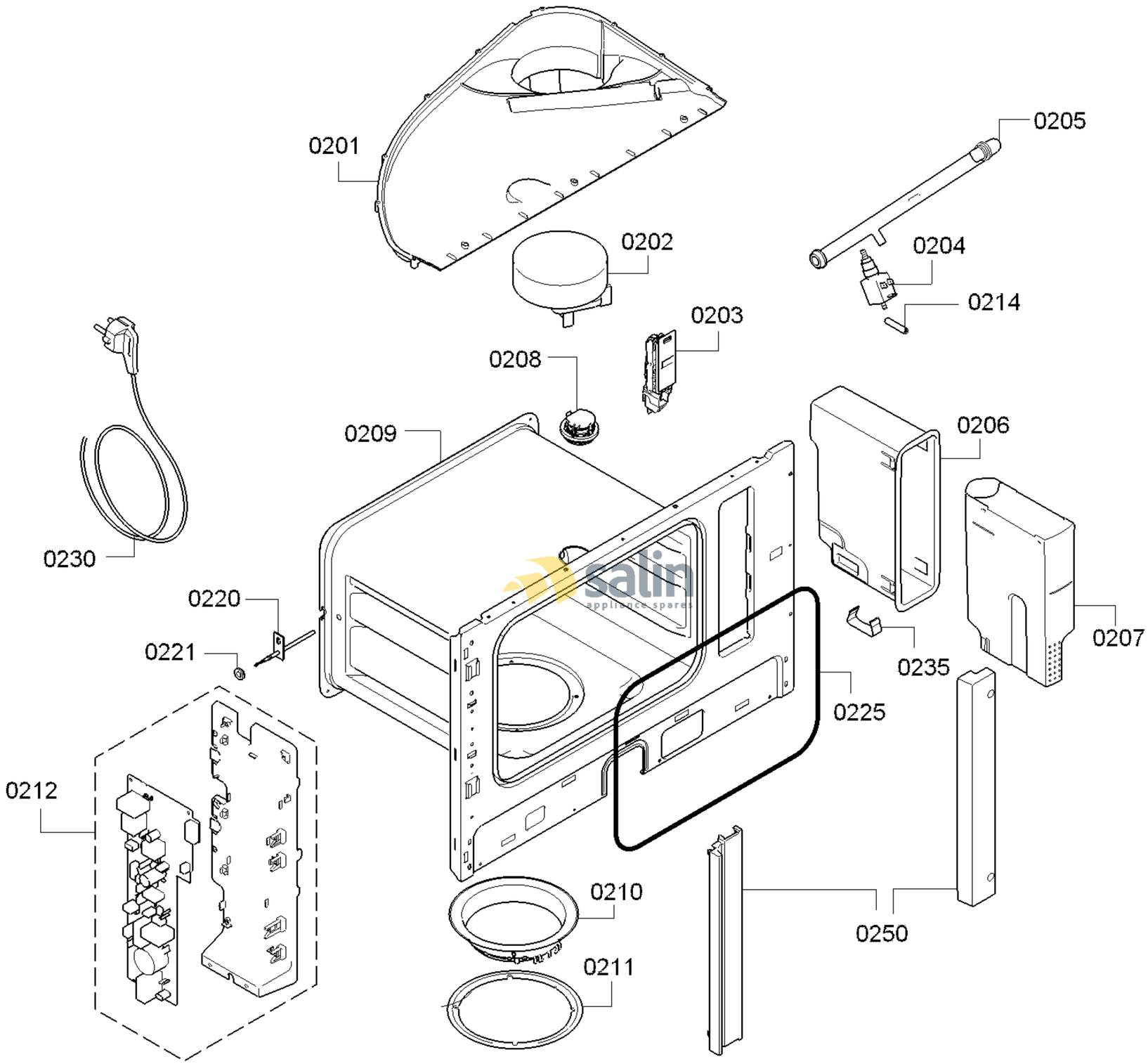

58300000151580 aet 000 c 2/3

FAMILY : HMT85DL53B
MODEL NO: HMT85DL53B/35
Check Position No/Part No or Replacement No