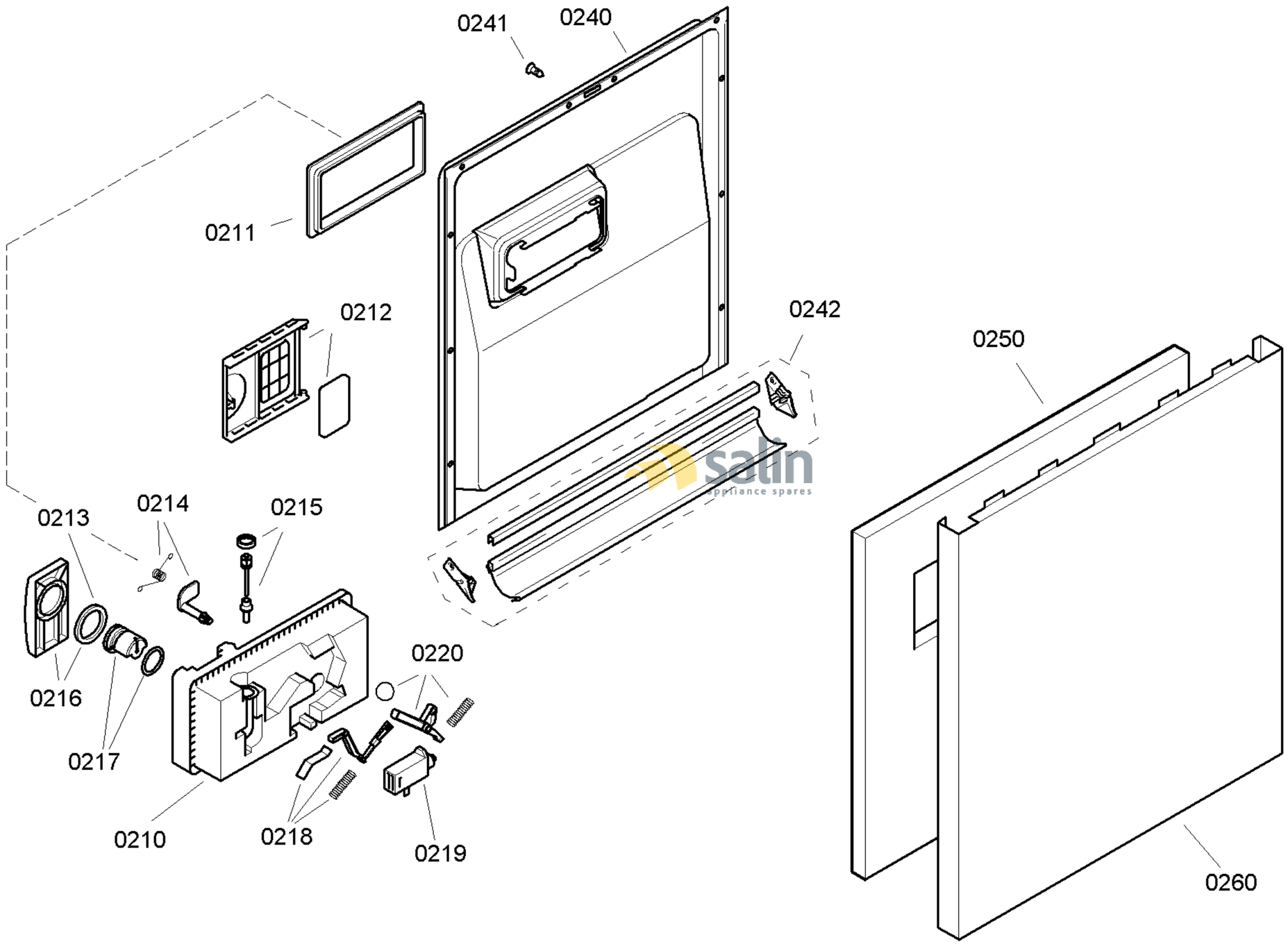

58300000131956 aet 000 a 2/6

FAMILY : SGU45M77SK
MODEL NO: SGU45M77SK/92
Check Position No/Part No or Replacement No

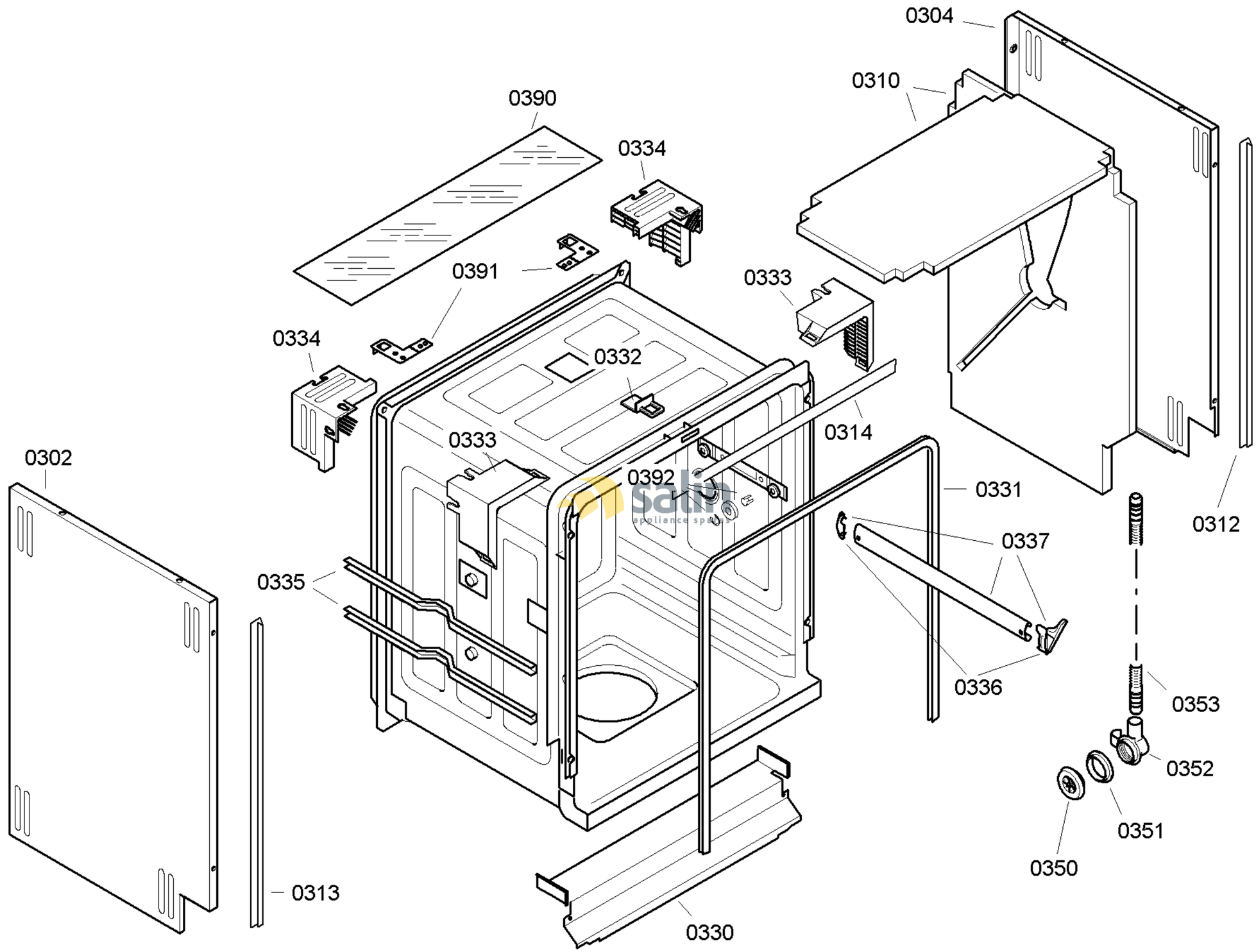

58300000131956 aet 000 a 3/6

FAMILY : SGU45M77SK
MODEL NO: SGU45M77SK/92
Check Position No/Part No or Replacement No

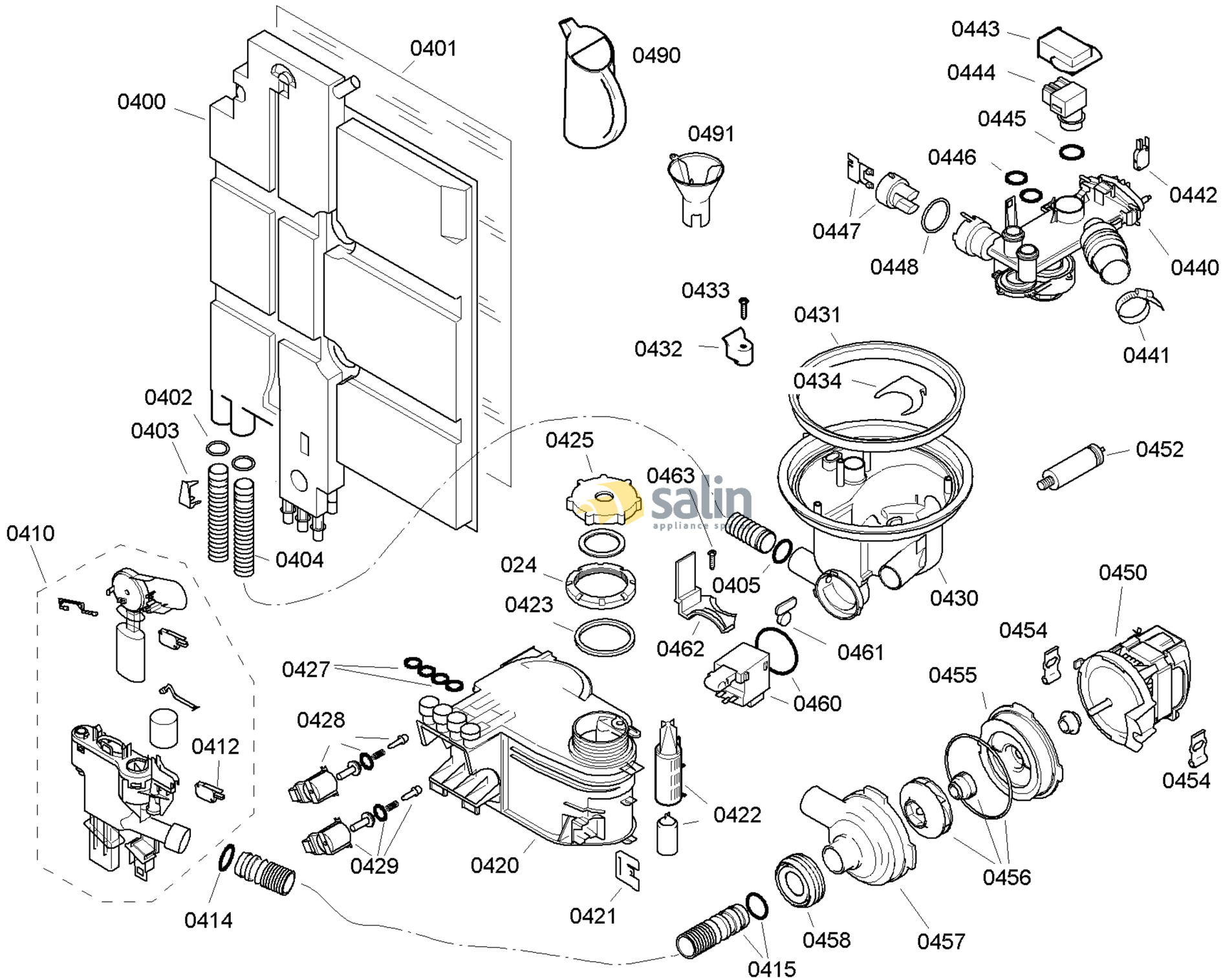

58300000131956 aet 000 a 4/6

FAMILY : SGU45M77SK
MODEL NO: SGU45M77SK/92
Check Position No/Part No or Replacement No

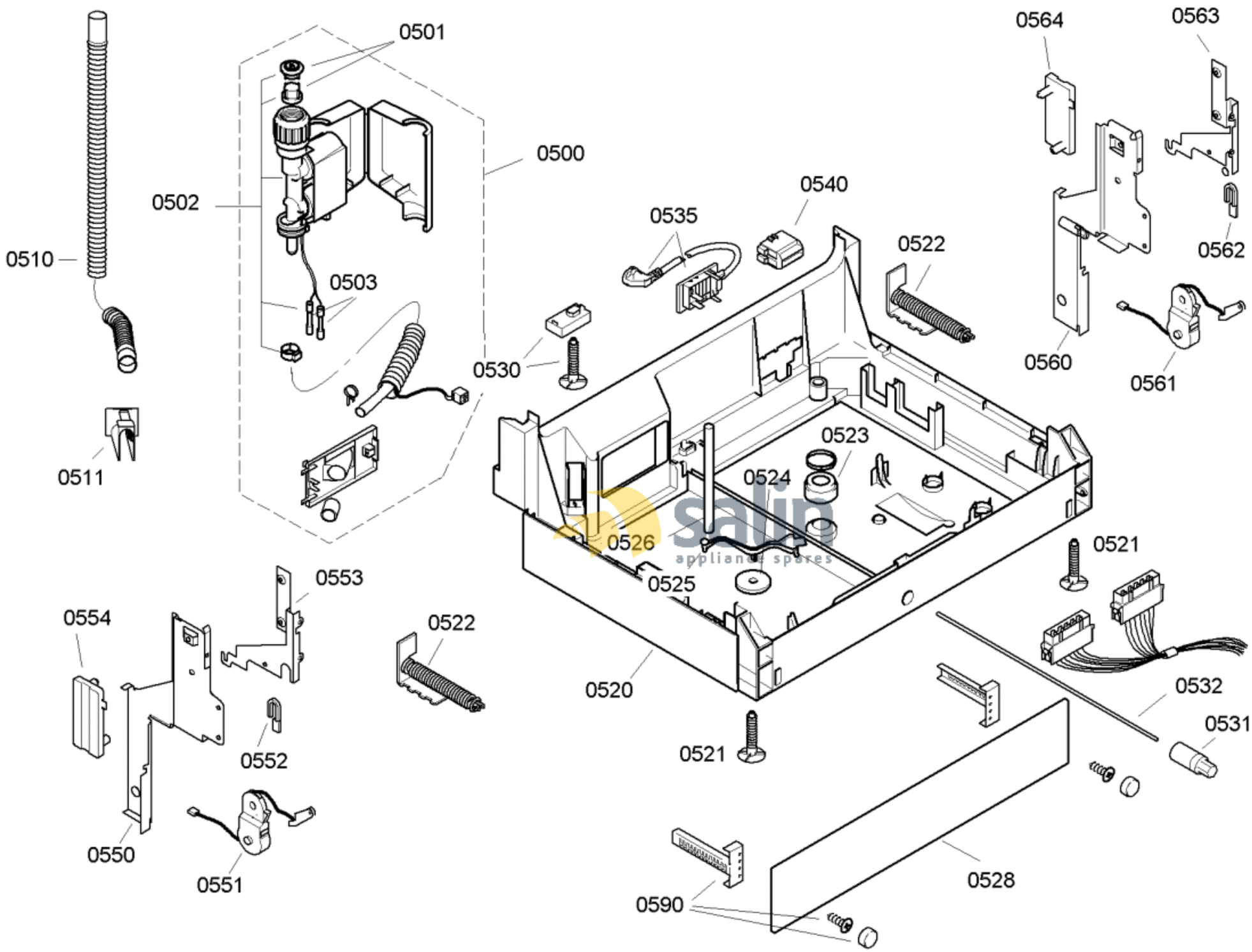

58300000131956 aet 000 a 5/6

FAMILY : SGU45M77SK

MODEL NO: SGU45M77SK/92

Check Position No/Part No or Replacement No

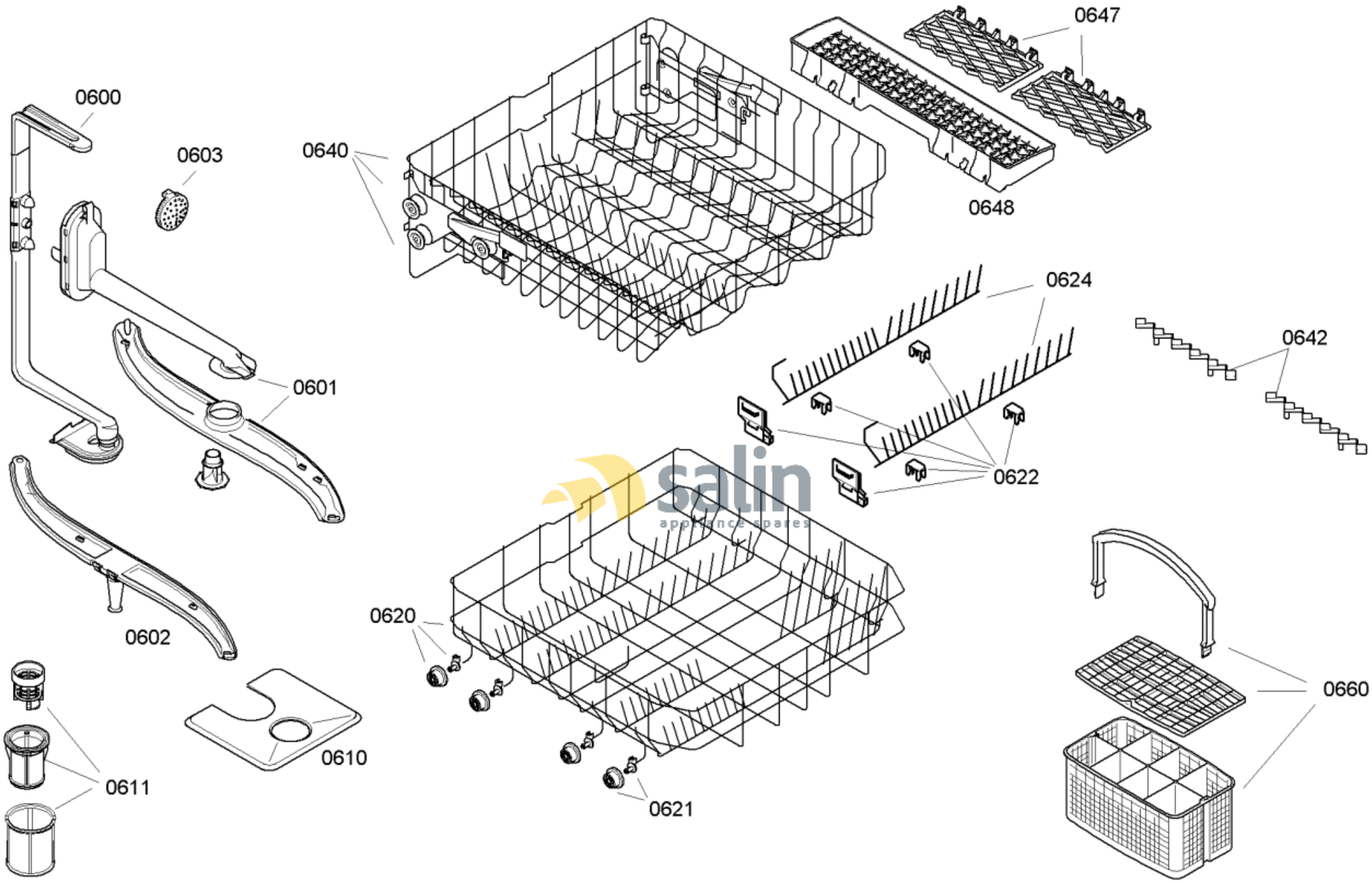

58300000131956 aet 000 a 6/6

FAMILY : SGU45M77SK

MODEL NO: SGU45M77SK/92

Check Position No/Part No or Replacement No