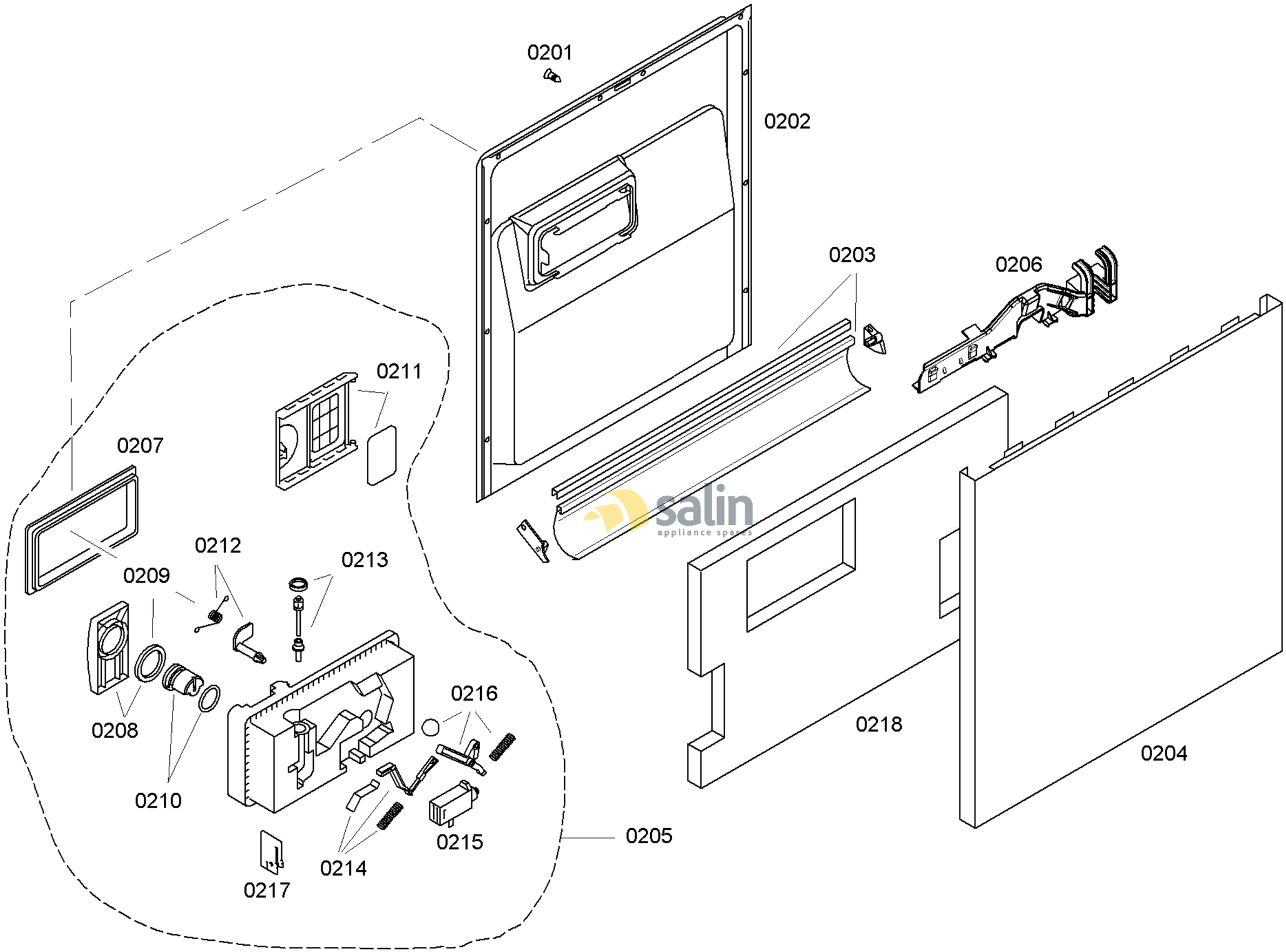

58300000133298 aet 000 a 2/6

FAMILY : SHU43E06UC
MODEL NO: SHU43E06UC/12
Check Position No/Part No or Replacement No

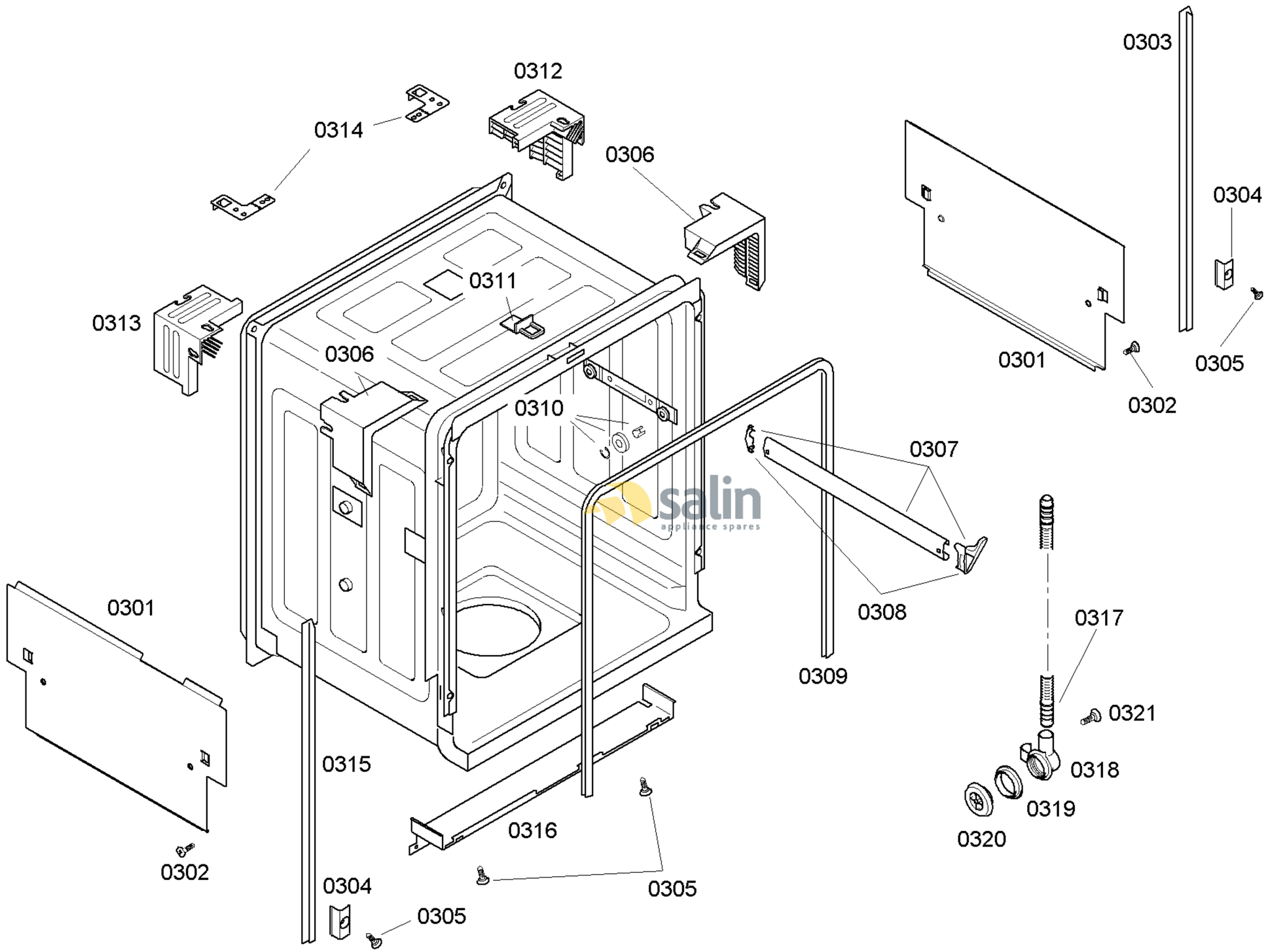

58300000133298 aet 000 a 3/6

FAMILY : SHU43E06UC
MODEL NO: SHU43E06UC/12
Check Position No/Part No or Replacement No

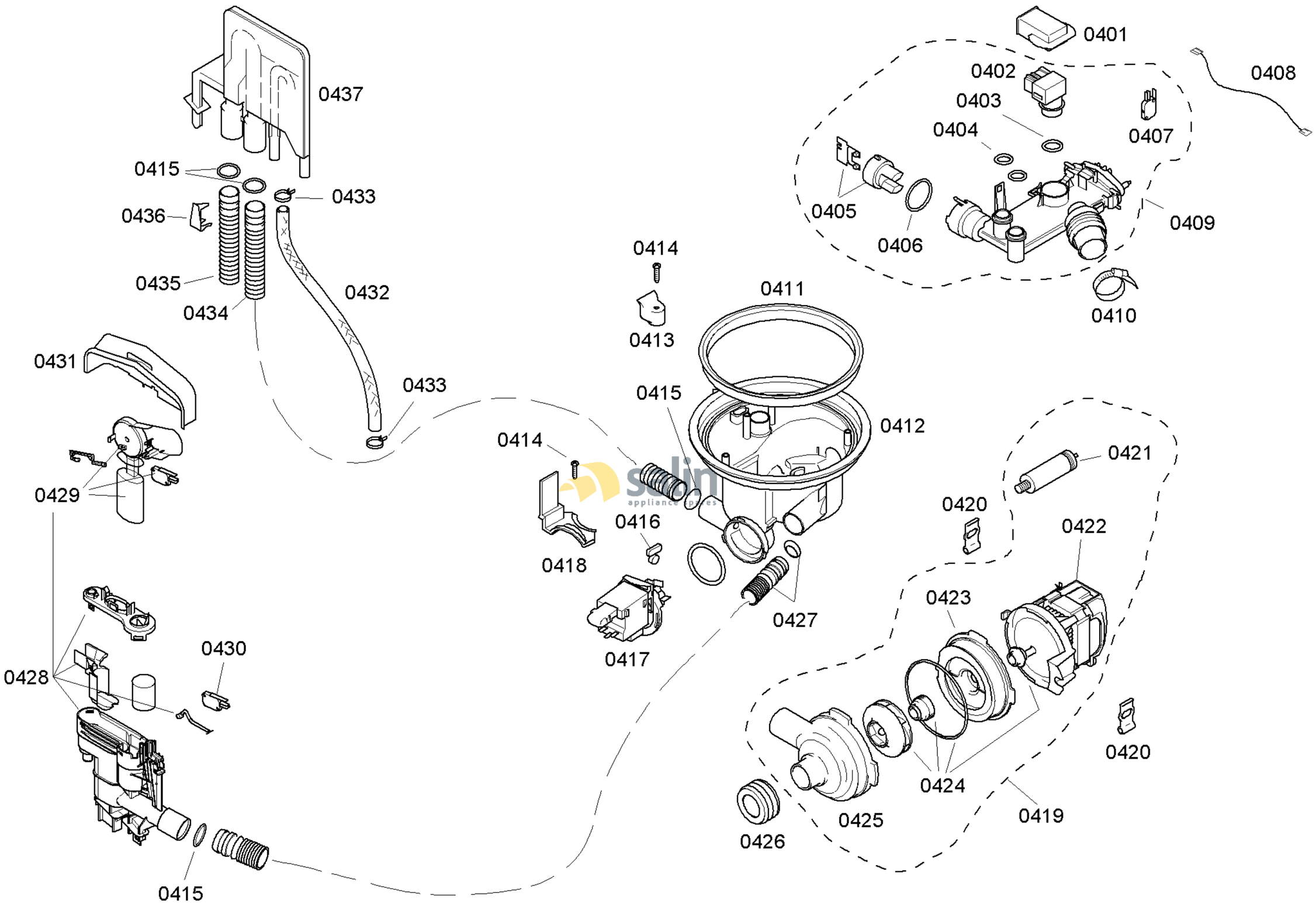

58300000133298 aet 000 a 4/6

FAMILY : SHU43E06UC
MODEL NO: SHU43E06UC/12
Check Position No/Part No or Replacement No

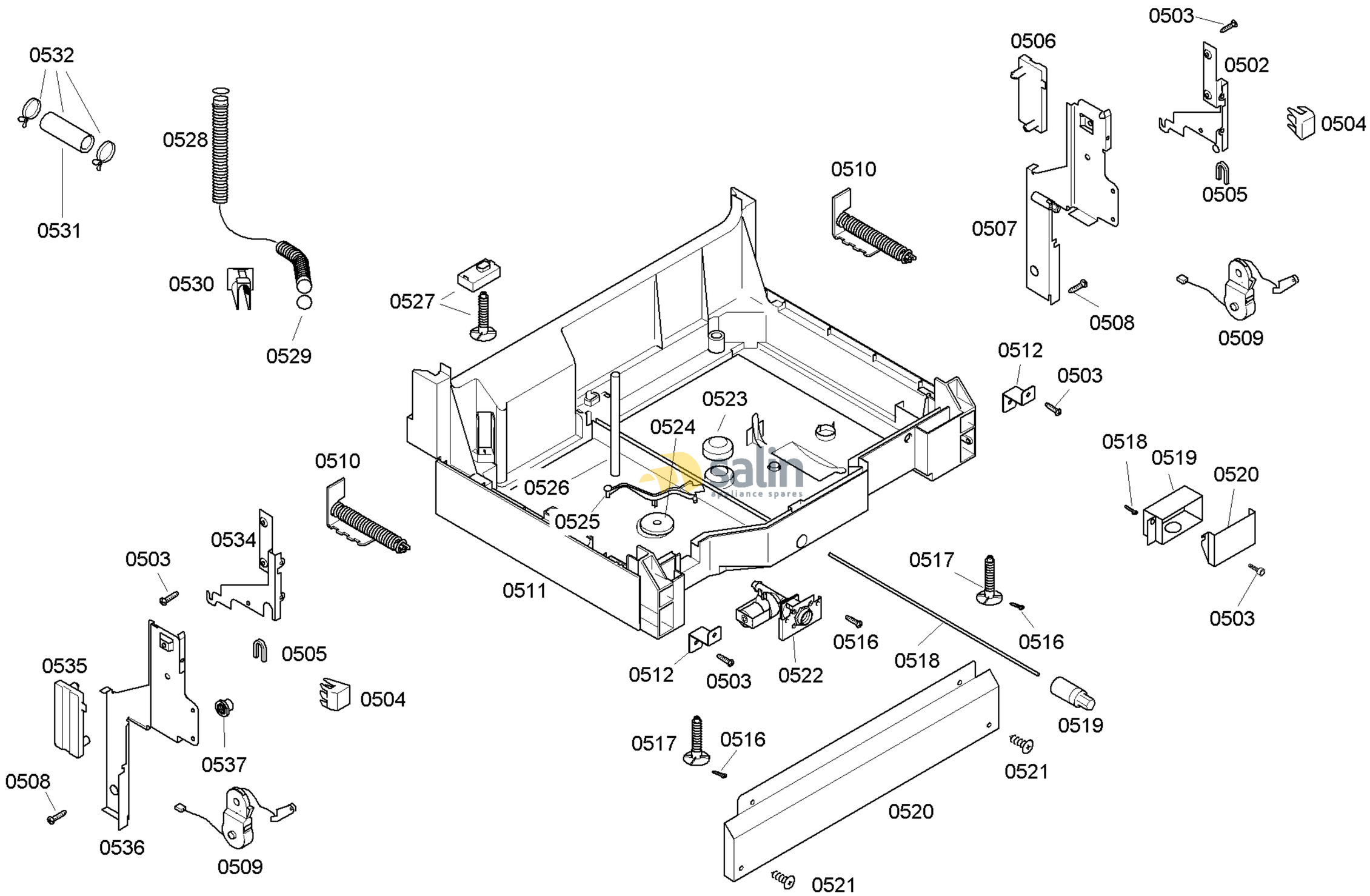

58300000133298 aet 000 a 5/6

FAMILY : SHU43E06UC
MODEL NO: SHU43E06UC/12
Check Position No/Part No or Replacement No

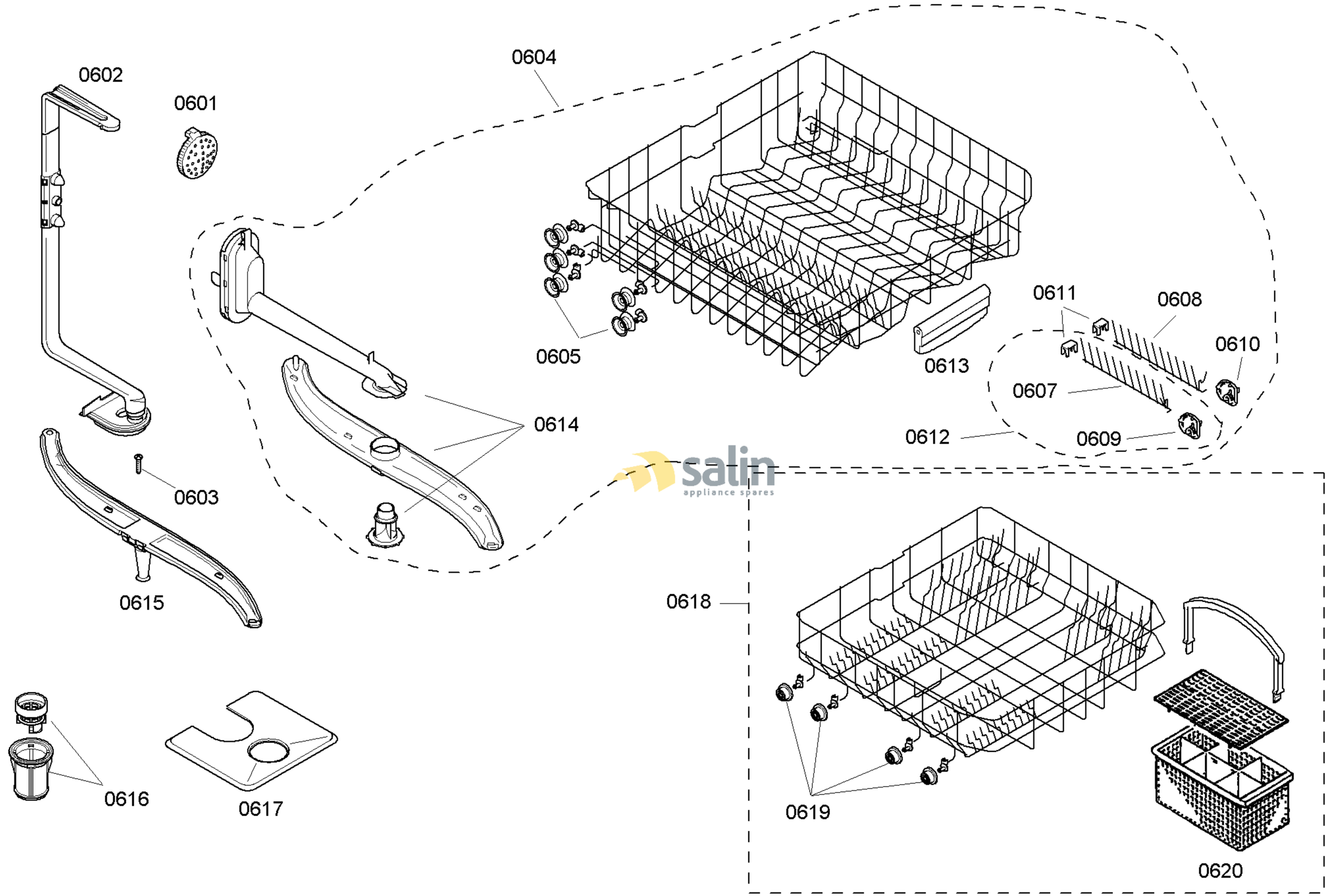

salin appliance spares

58300000133298 aet 000 a 6/6

FAMILY : SHU43E06UC
MODEL NO: SHU43E06UC/12
Check Position No/Part No or Replacement No