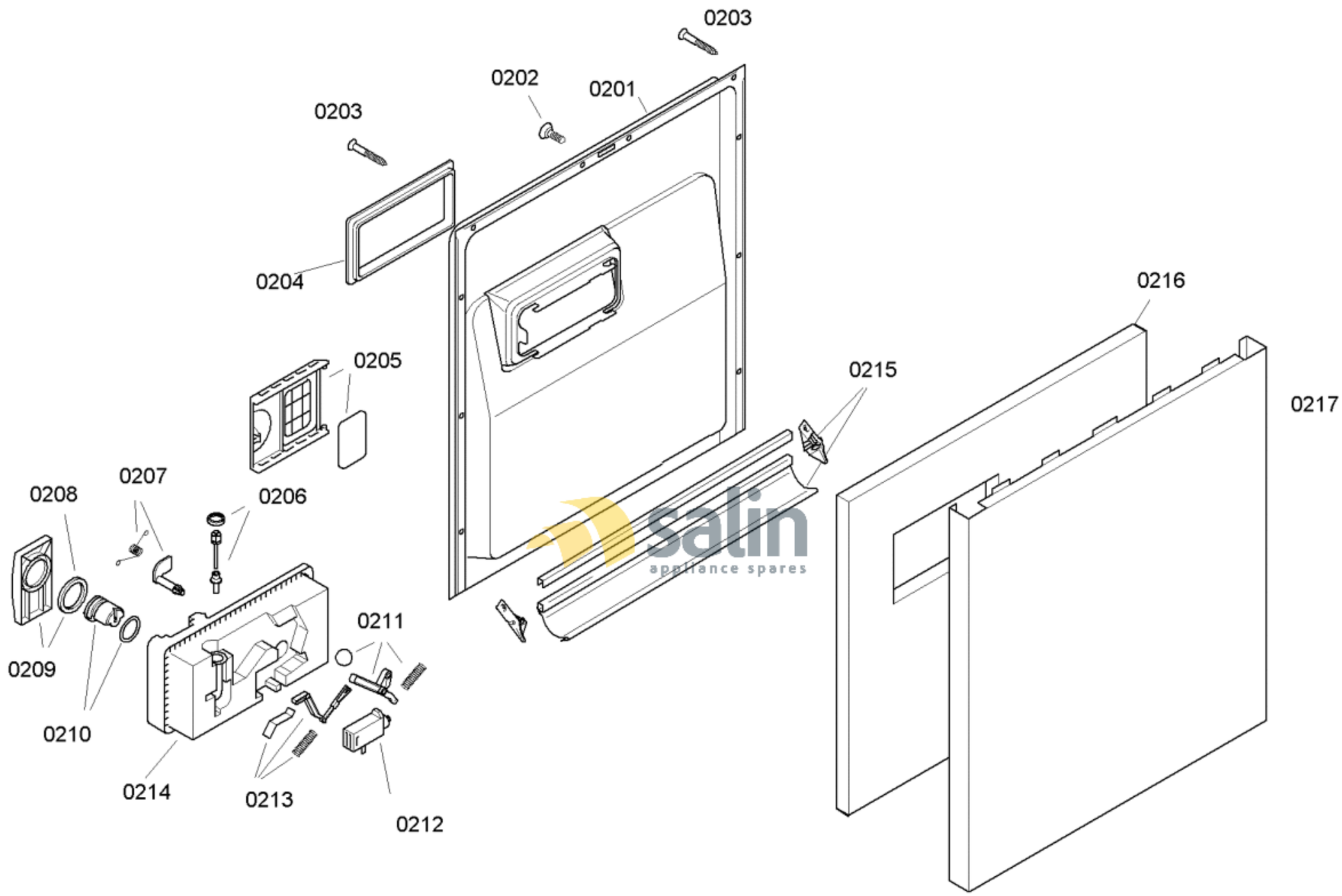


58300000119412 aet 000 e 2/6

FAMILY : SGU45M45EP

MODEL NO: SGU45M45EP/75

Check Position No/Part No or Replacement No

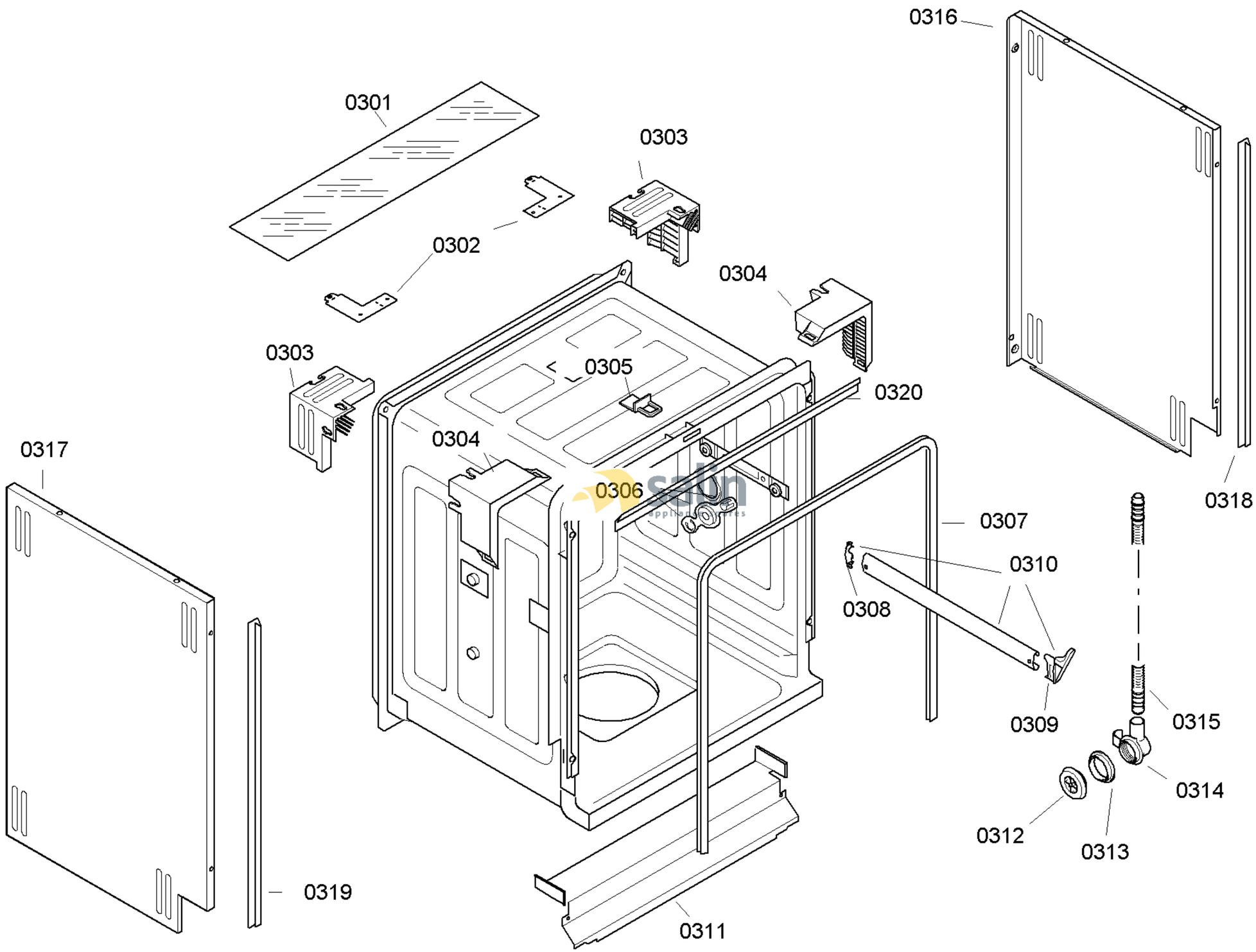


58300000119412 aet 000 e 3/6

FAMILY : SGU45M45EP
MODEL NO: SGU45M45EP/75
Check Position No/Part No or Replacement No

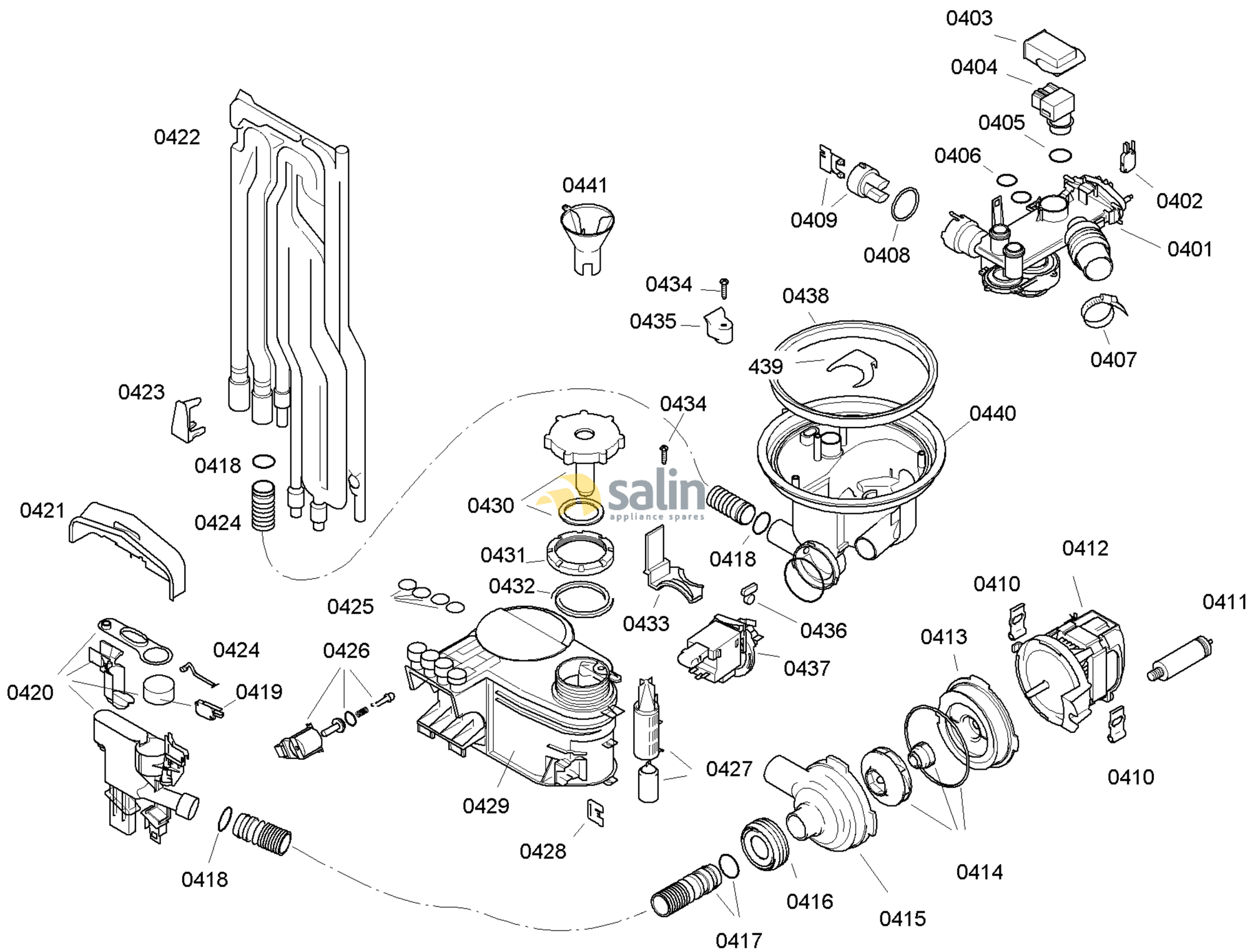


58300000119412 aet 000 e 4/6

FAMILY : SGU45M45EP
MODEL NO: SGU45M45EP/75
Check Position No/Part No or Replacement No

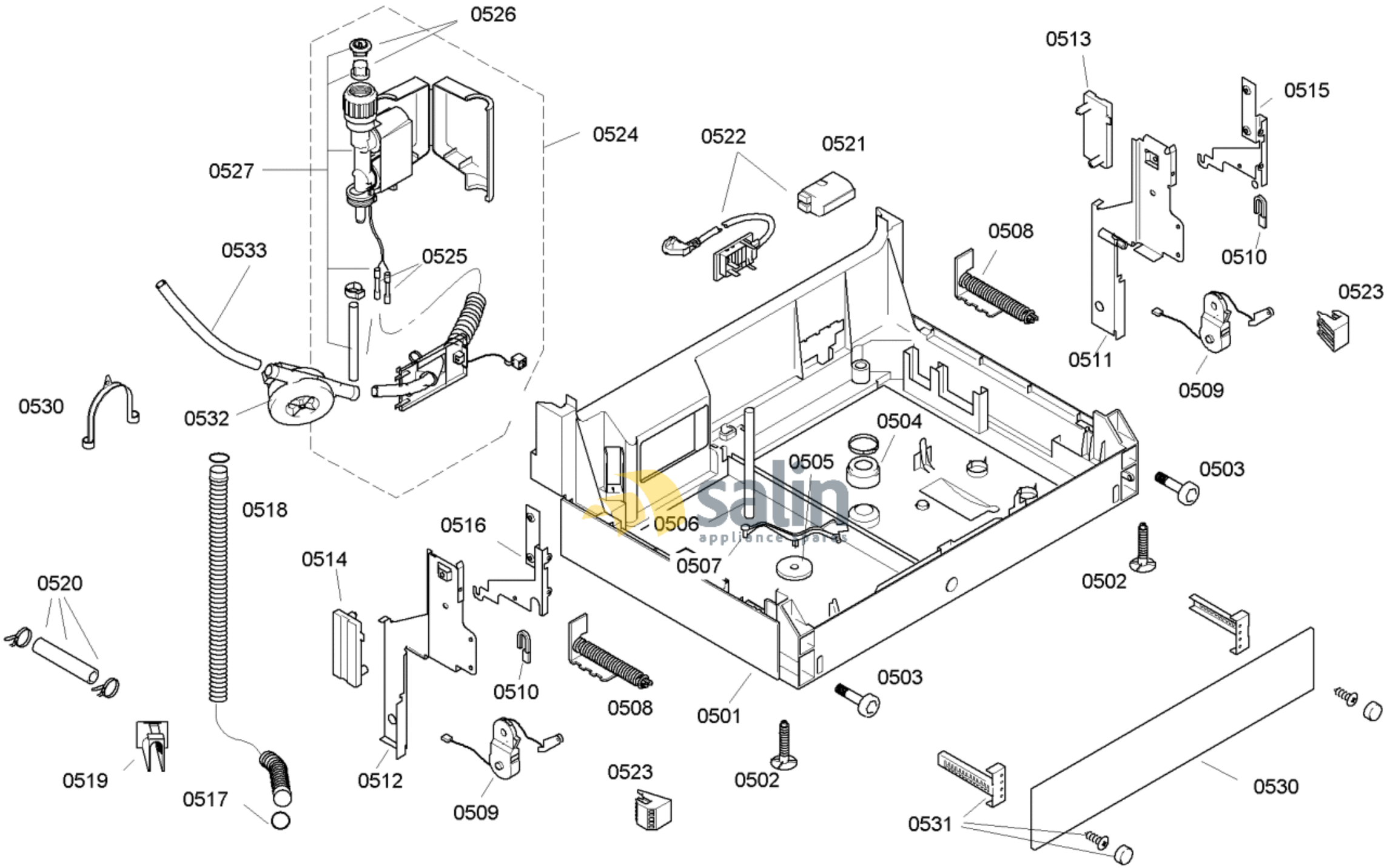


58300000119412 aet 000 e 5/6

FAMILY : SGU45M45EP

MODEL NO: SGU45M45EP/75

Check Position No/Part No or Replacement No

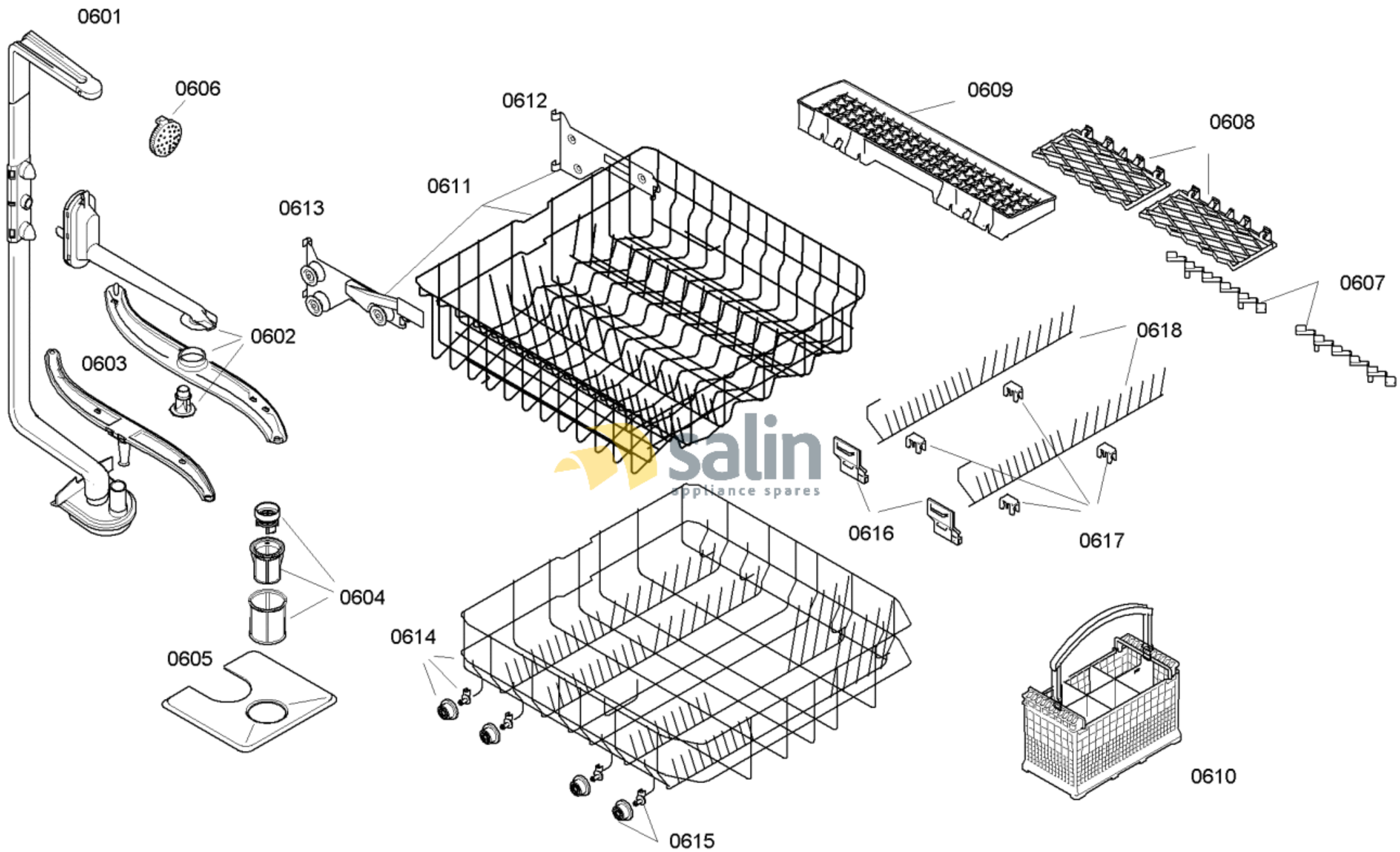


58300000119412 aet 000 e 6/6

FAMILY : SGU45M45EP

MODEL NO: SGU45M45EP/75

Check Position No/Part No or Replacement No