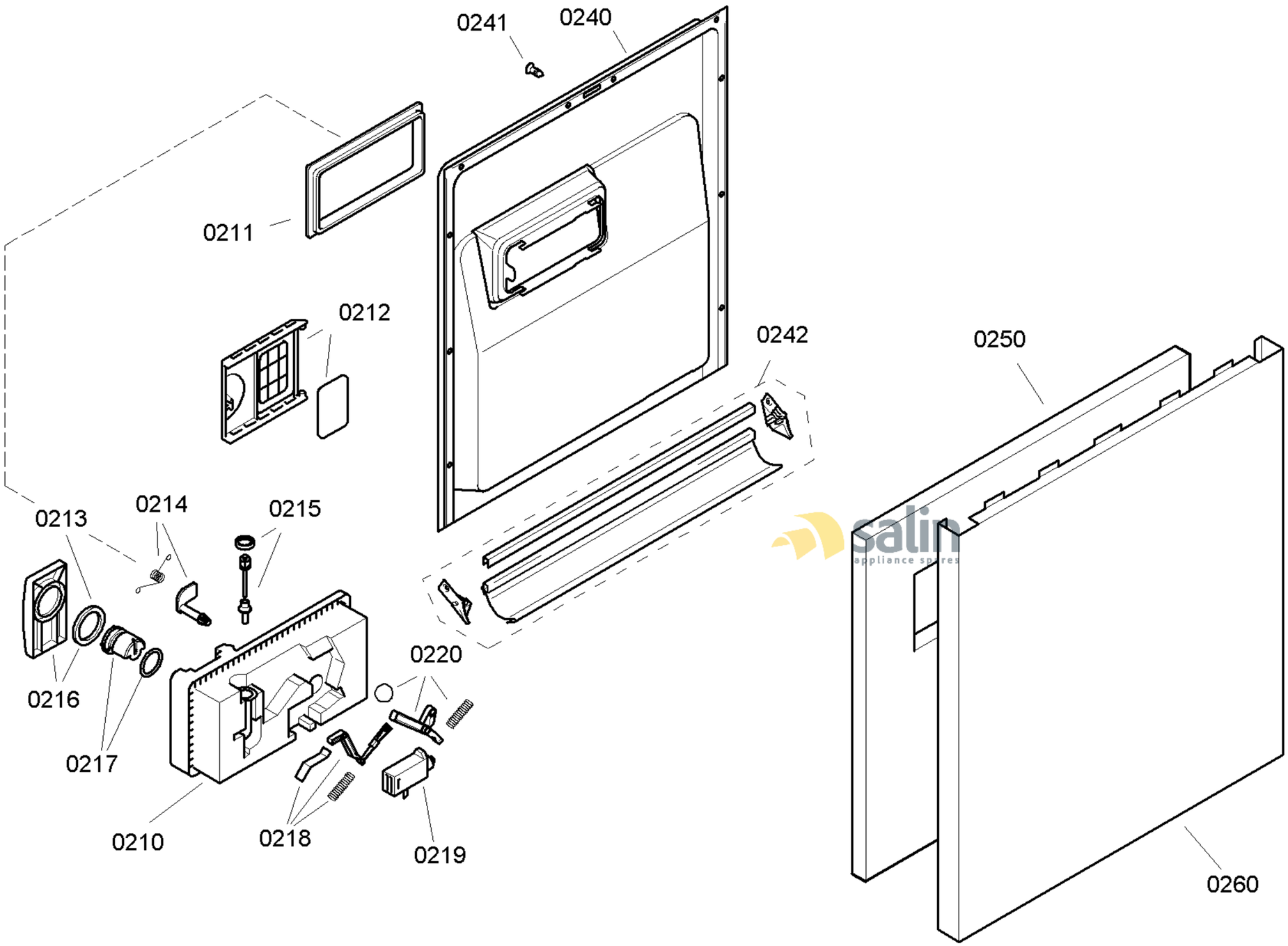

58300000114449 aet 000 b 2/6

FAMILY : SGU53E05AU
MODEL NO: SGU53E05AU/76
Check Position No/Part No or Replacement No

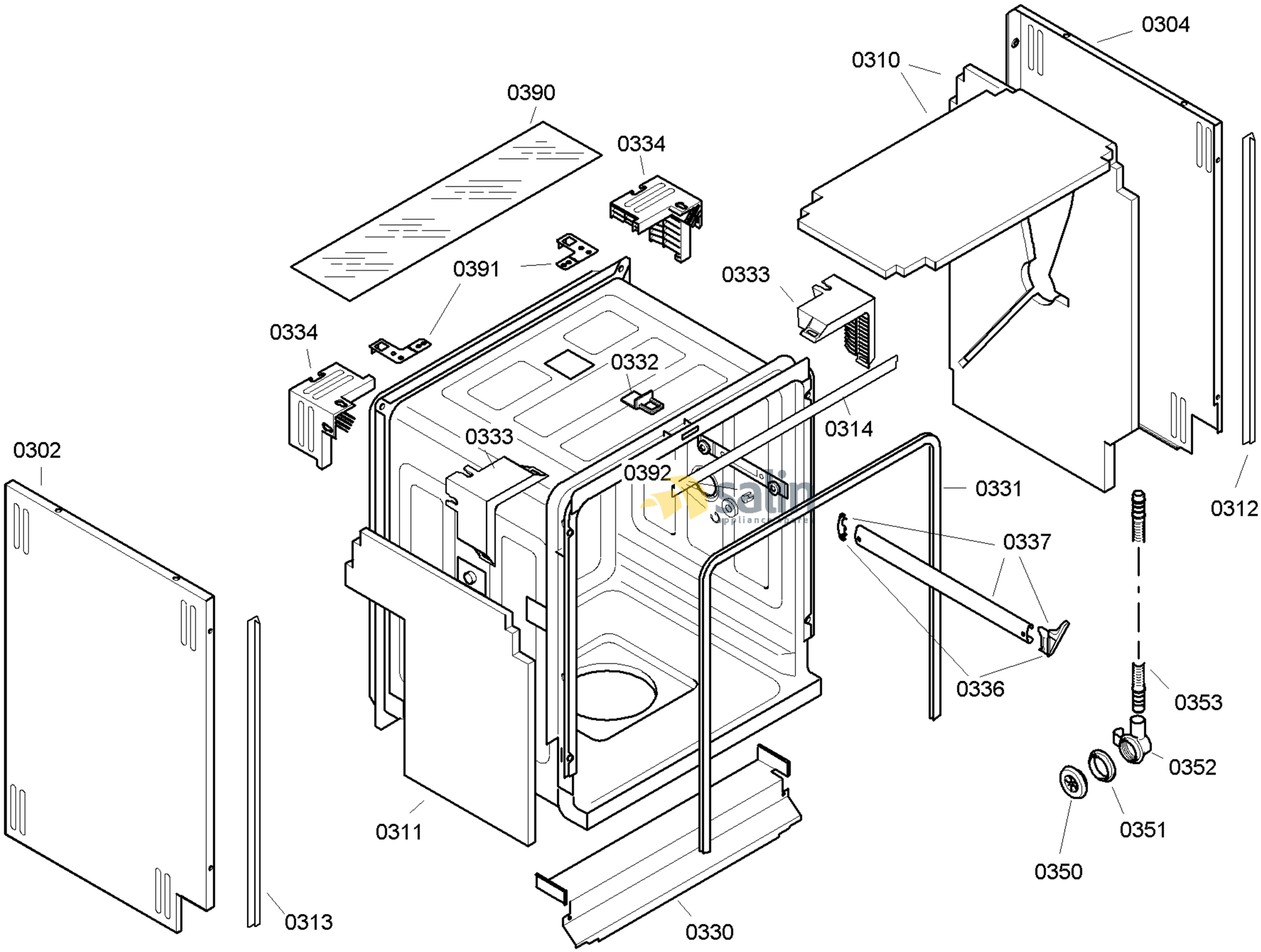

58300000114449 aet 000 b 3/6

FAMILY : SGU53E05AU
MODEL NO: SGU53E05AU/76
Check Position No/Part No or Replacement No

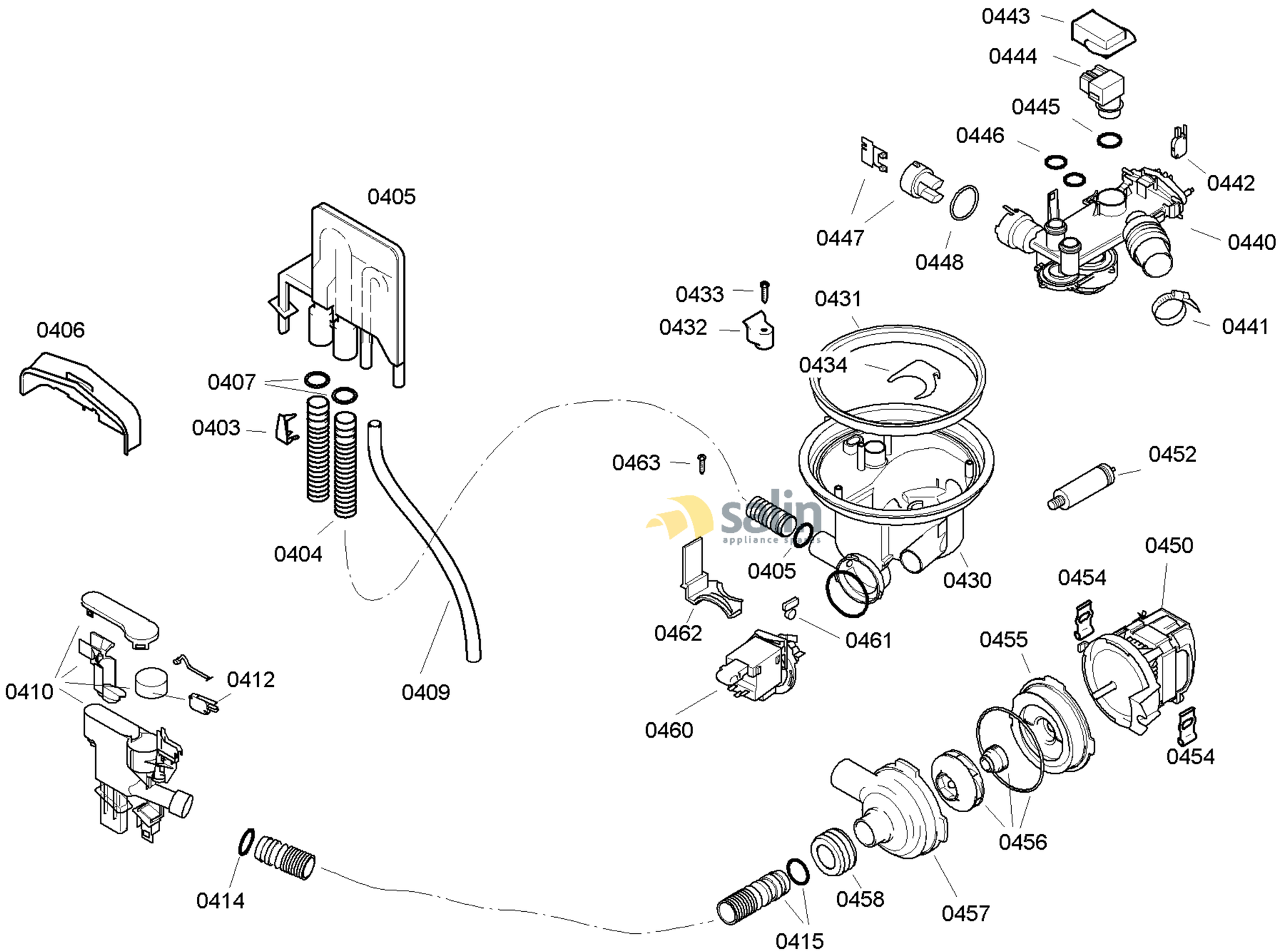

58300000114449 aet 000 b 4/6

FAMILY : SGU53E05AU
MODEL NO: SGU53E05AU/76
Check Position No/Part No or Replacement No

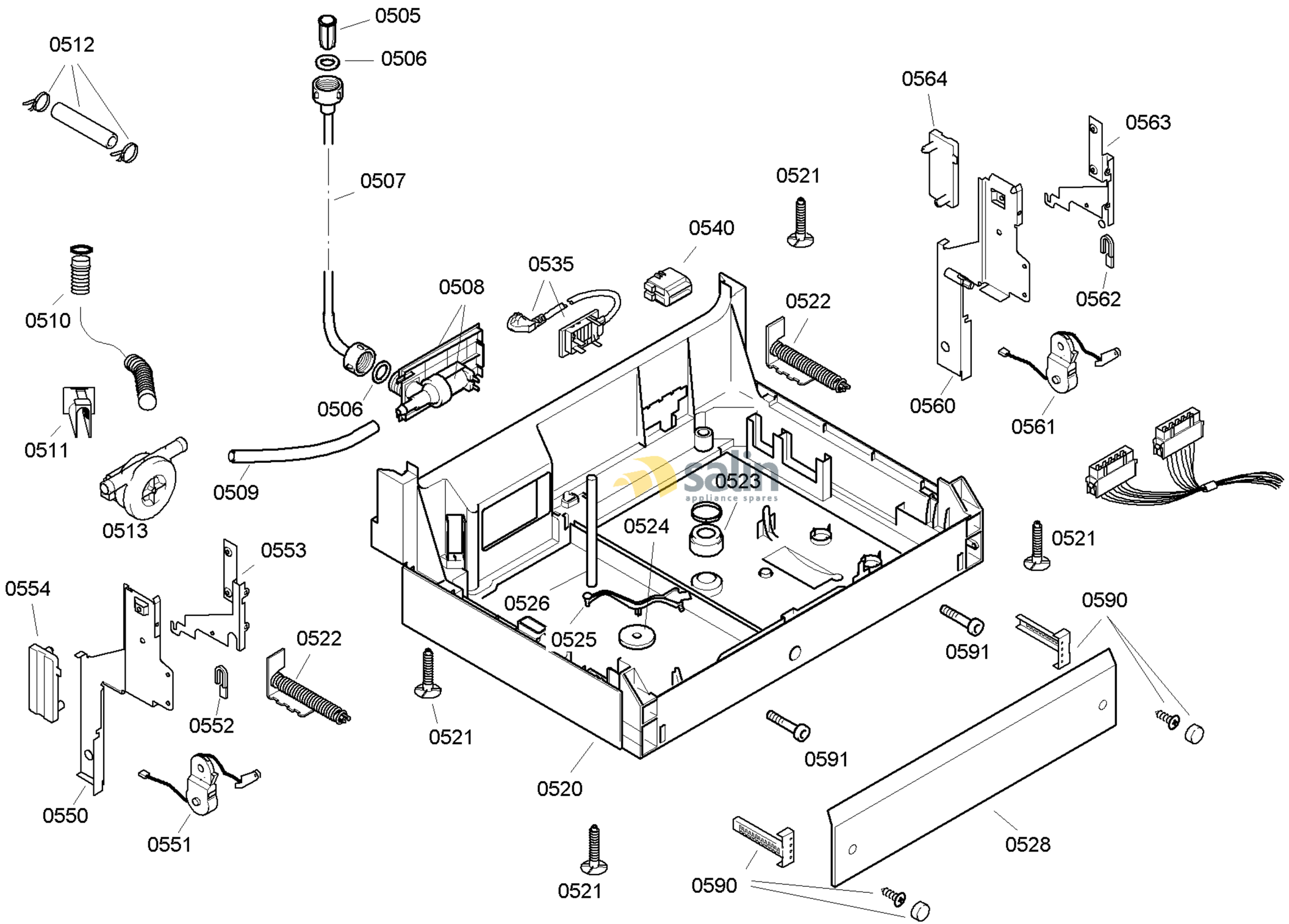

58300000114449 aet 000 b 5/6

FAMILY : SGU53E05AU
MODEL NO: SGU53E05AU/76
Check Position No/Part No or Replacement No

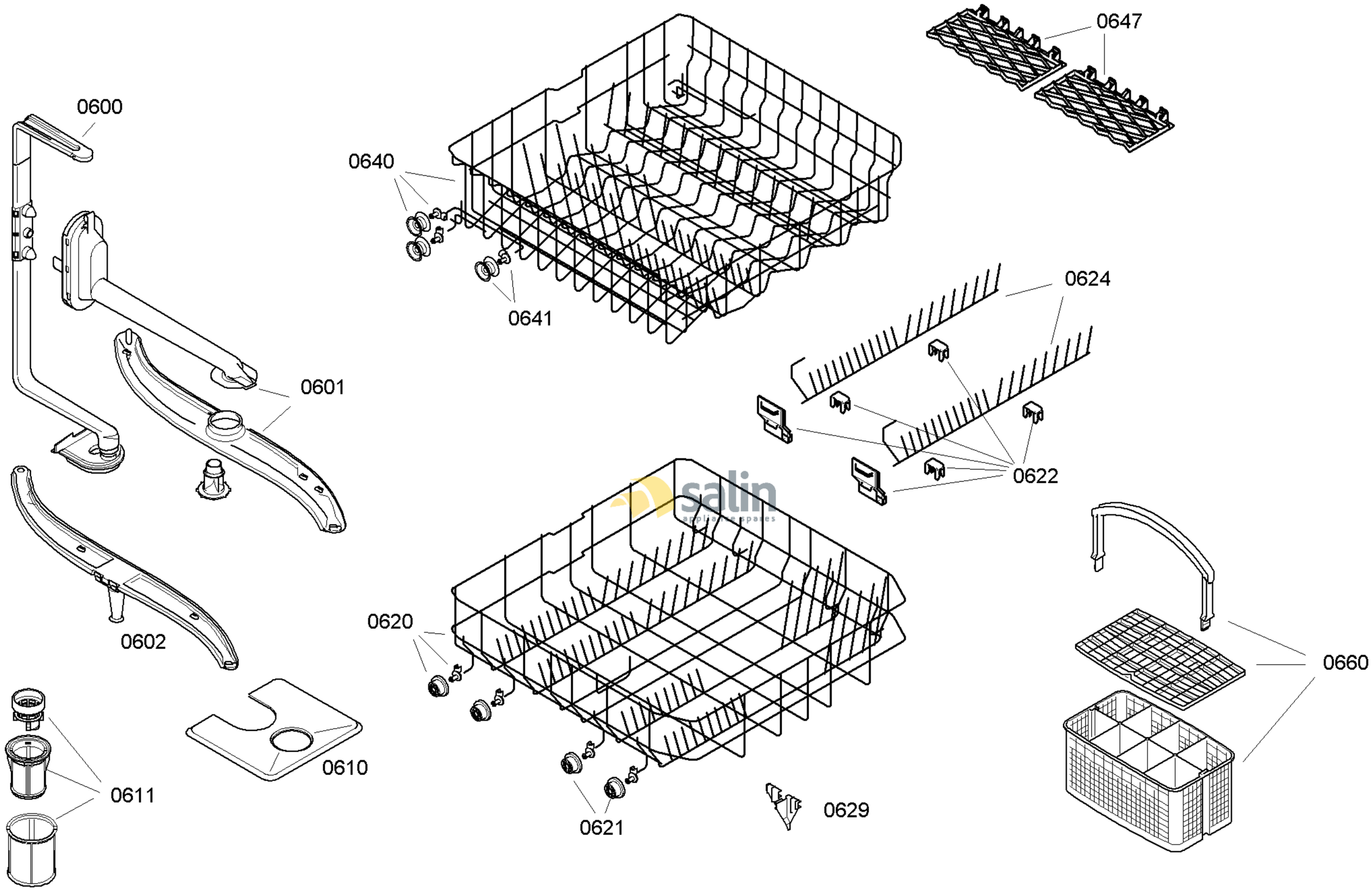

58300000114449 aet 000 b 6/6

FAMILY : SGU53E05AU
MODEL NO: SGU53E05AU/76
Check Position No/Part No or Replacement No