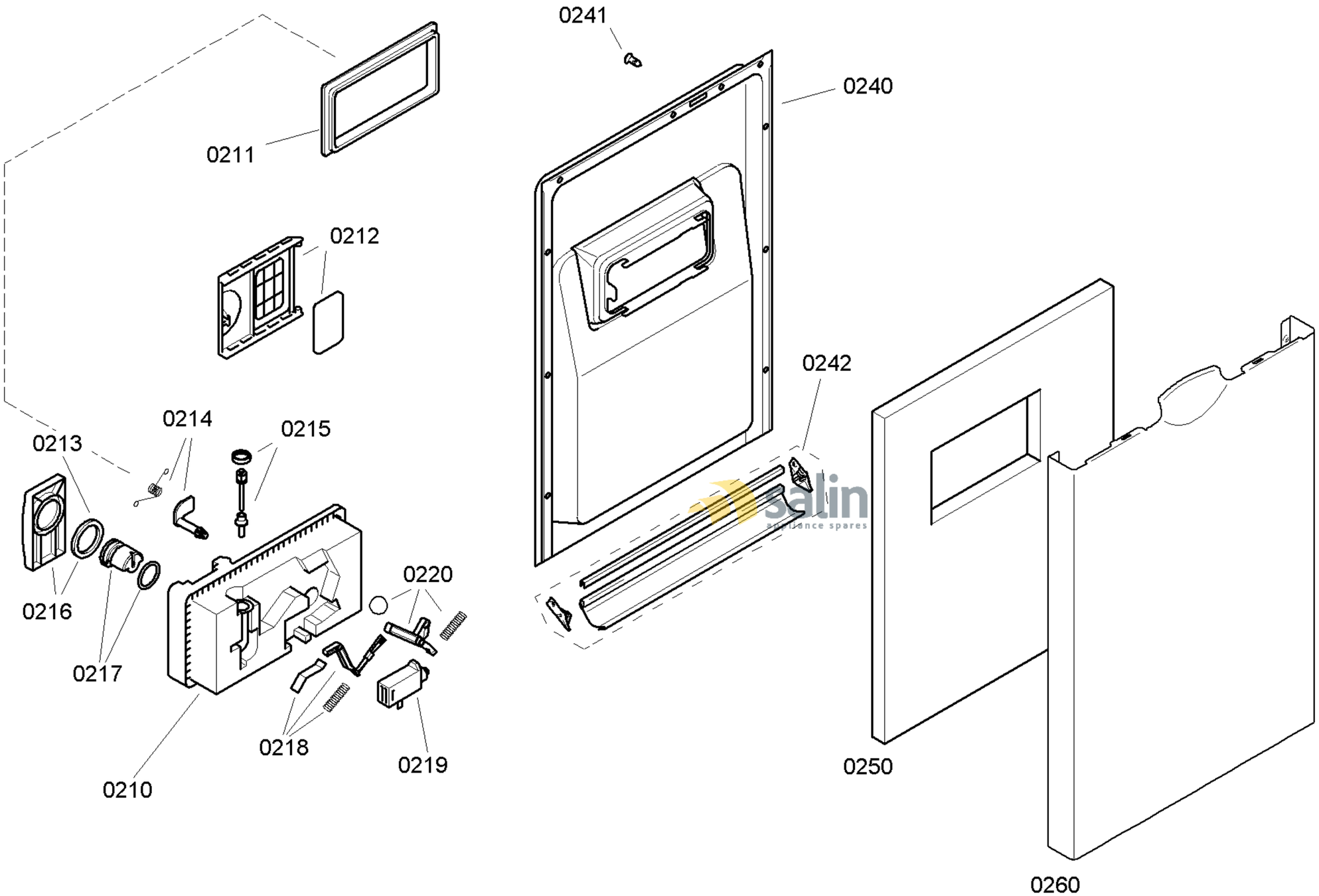

58300000131129 aet 000 a 2/6

FAMILY : SRU55M18SK
MODEL NO: SRU55M18SK/07
Check Position No/Part No or Replacement No

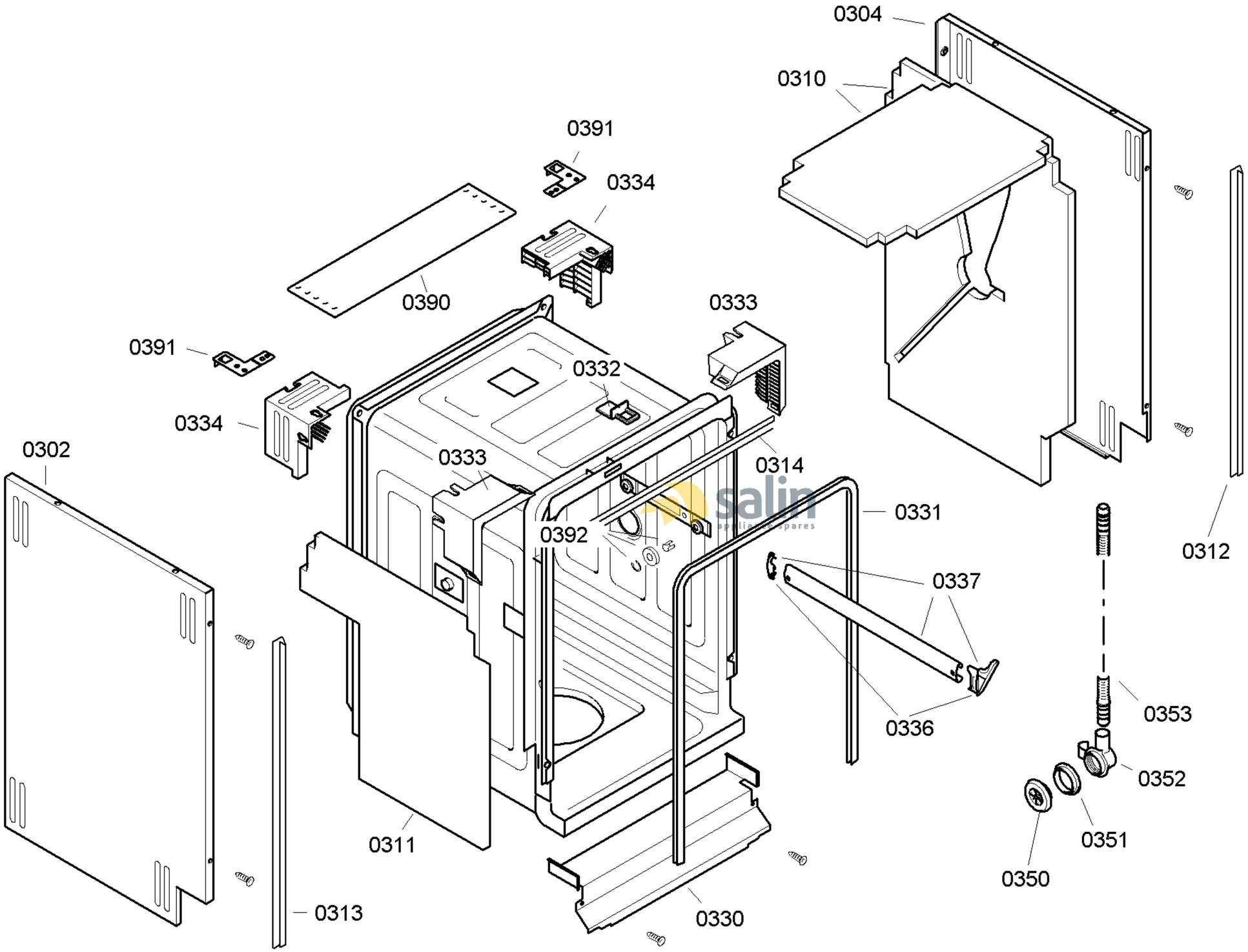

58300000131129 aet 000 a 3/6

FAMILY : SRU55M18SK
MODEL NO: SRU55M18SK/07
Check Position No/Part No or Replacement No

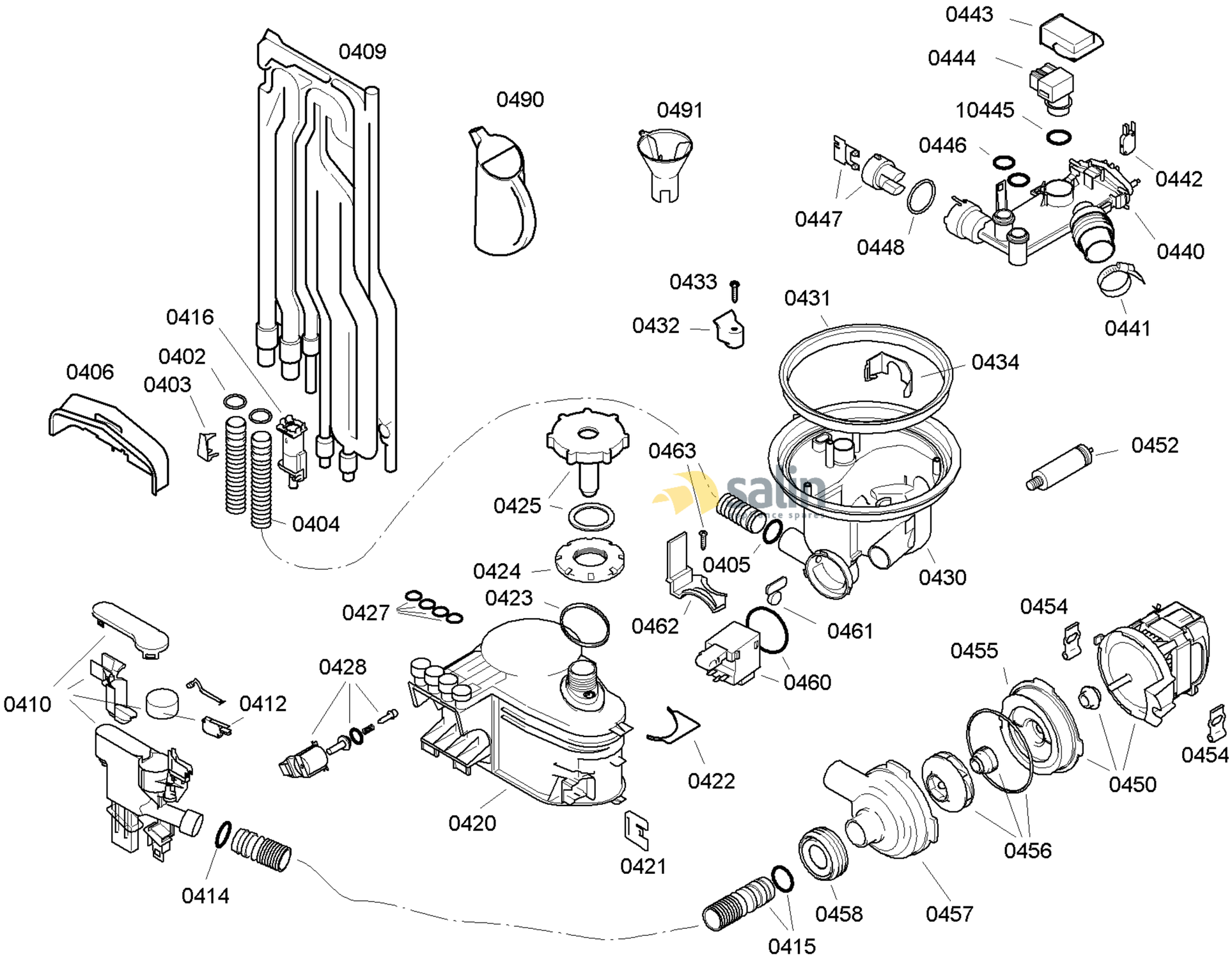

58300000131129 aet 000 a 4/6

FAMILY : SRU55M18SK
MODEL NO: SRU55M18SK/07
Check Position No/Part No or Replacement No

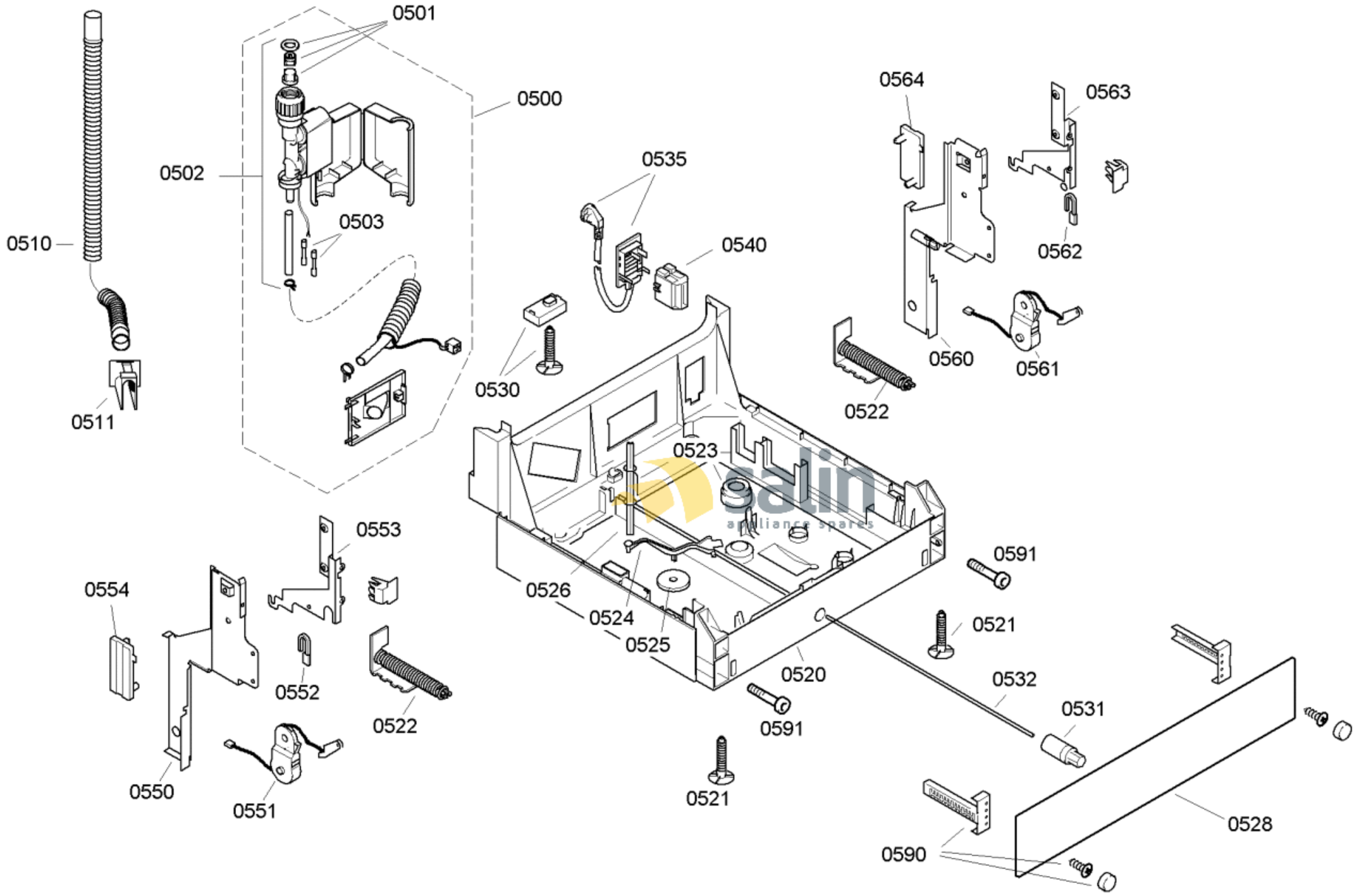

58300000131129 aet 000 a 5/6

FAMILY : SRU55M18SK

MODEL NO: SRU55M18SK/07

Check Position No/Part No or Replacement No

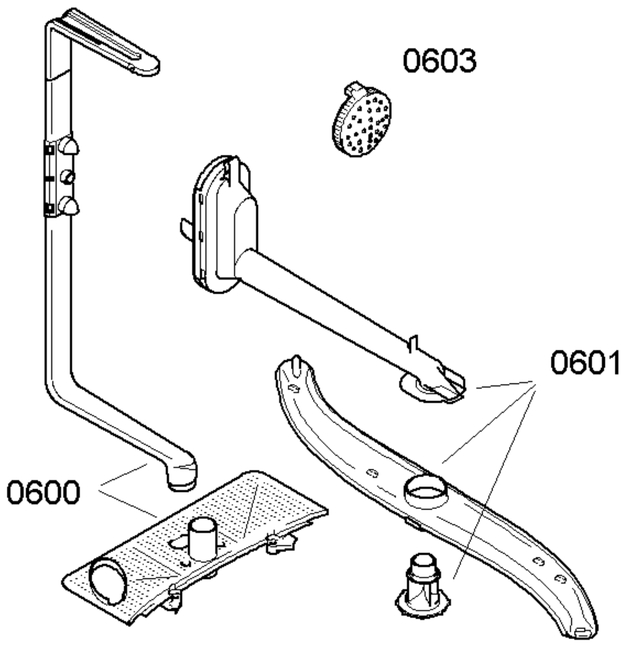

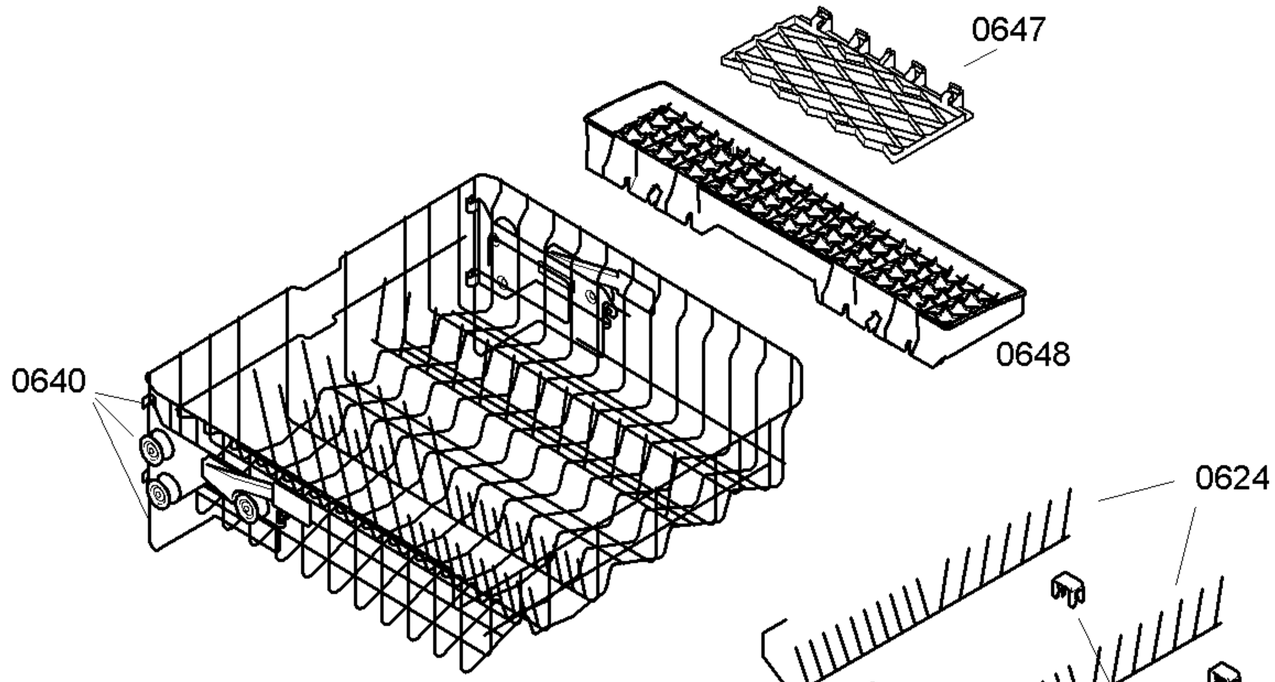

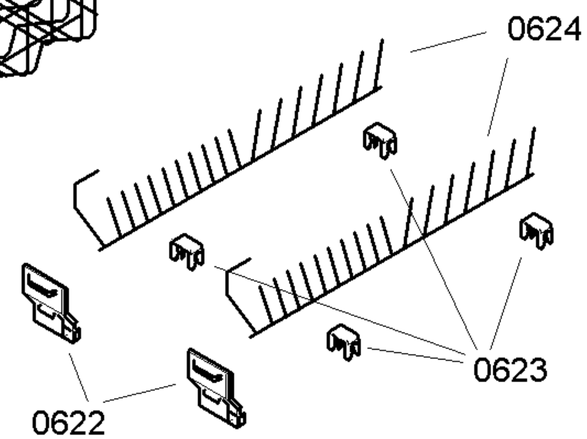

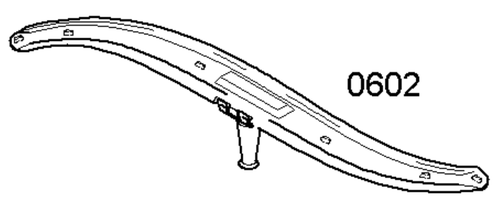

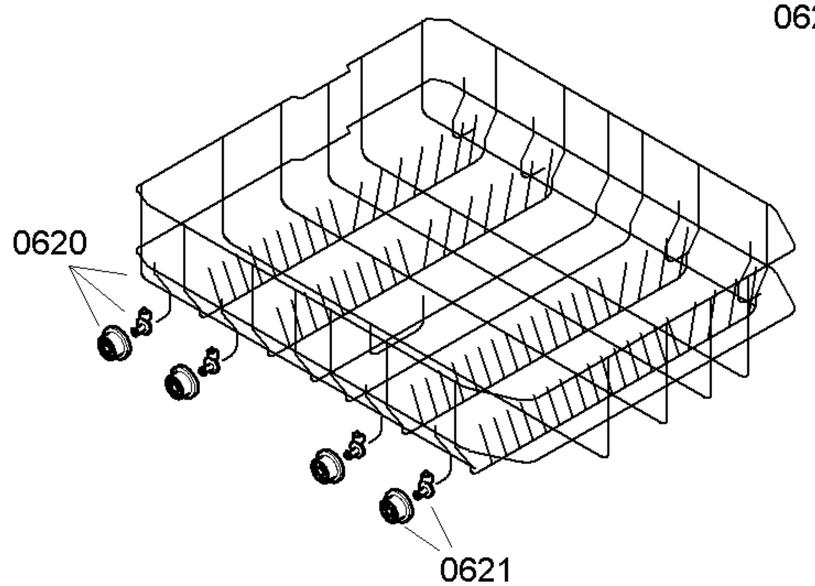

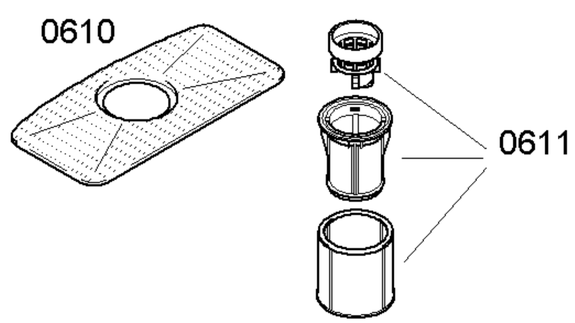

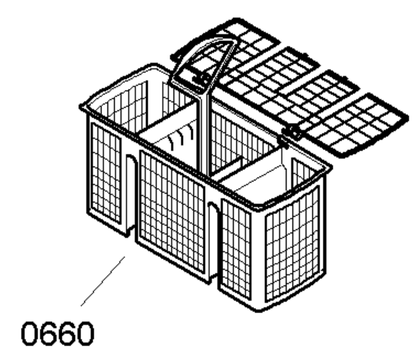

salin
appliance spares

58300000131129 aet 000 a 6/6

FAMILY : SRU55M18SK
MODEL NO: SRU55M18SK/07
Check Position No/Part No or Replacement No