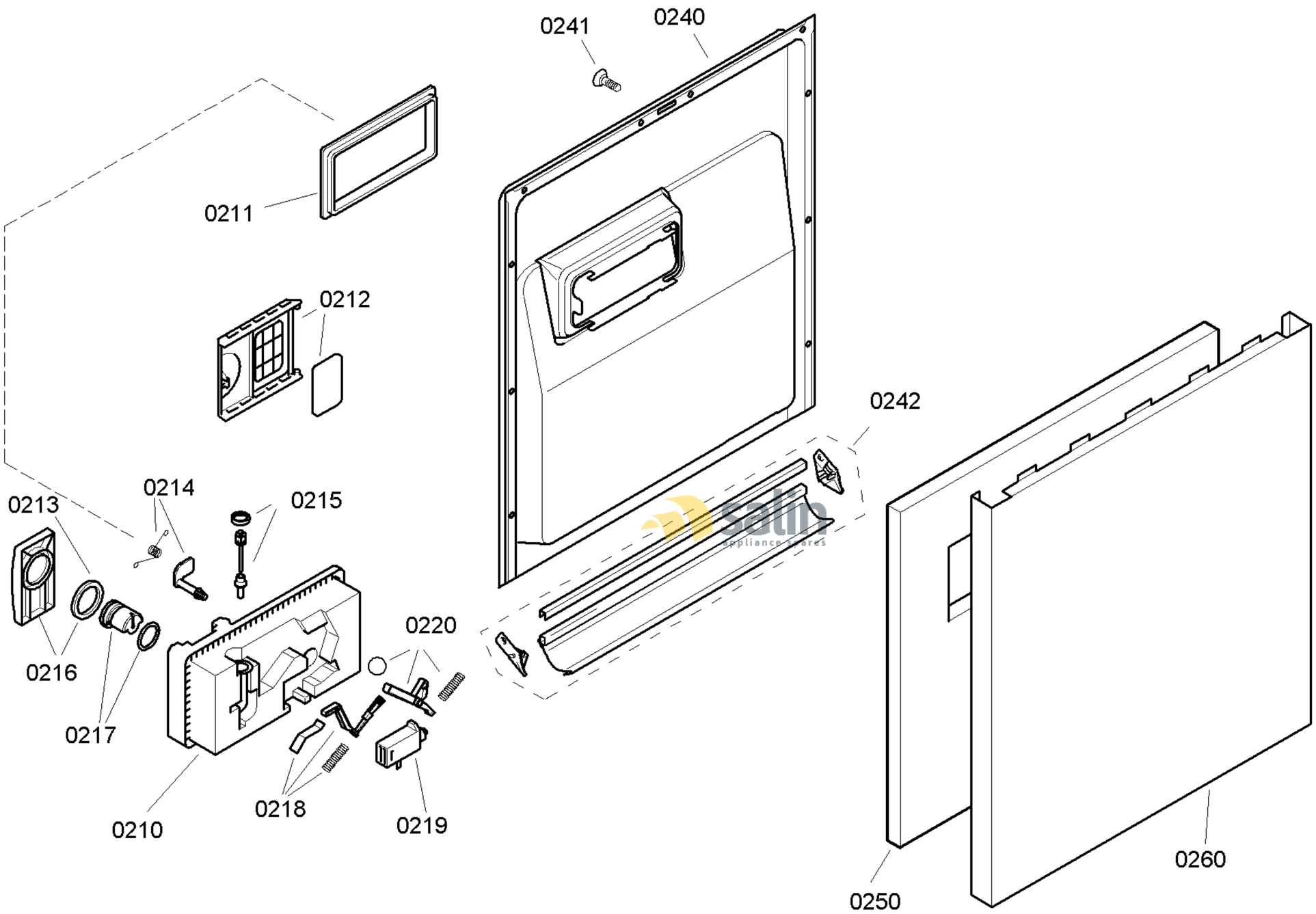

58300000119733 aet 000 a 2/6

FAMILY : SGU55E28SK
MODEL NO: SGU55E28SK/73
Check Position No/Part No or Replacement No

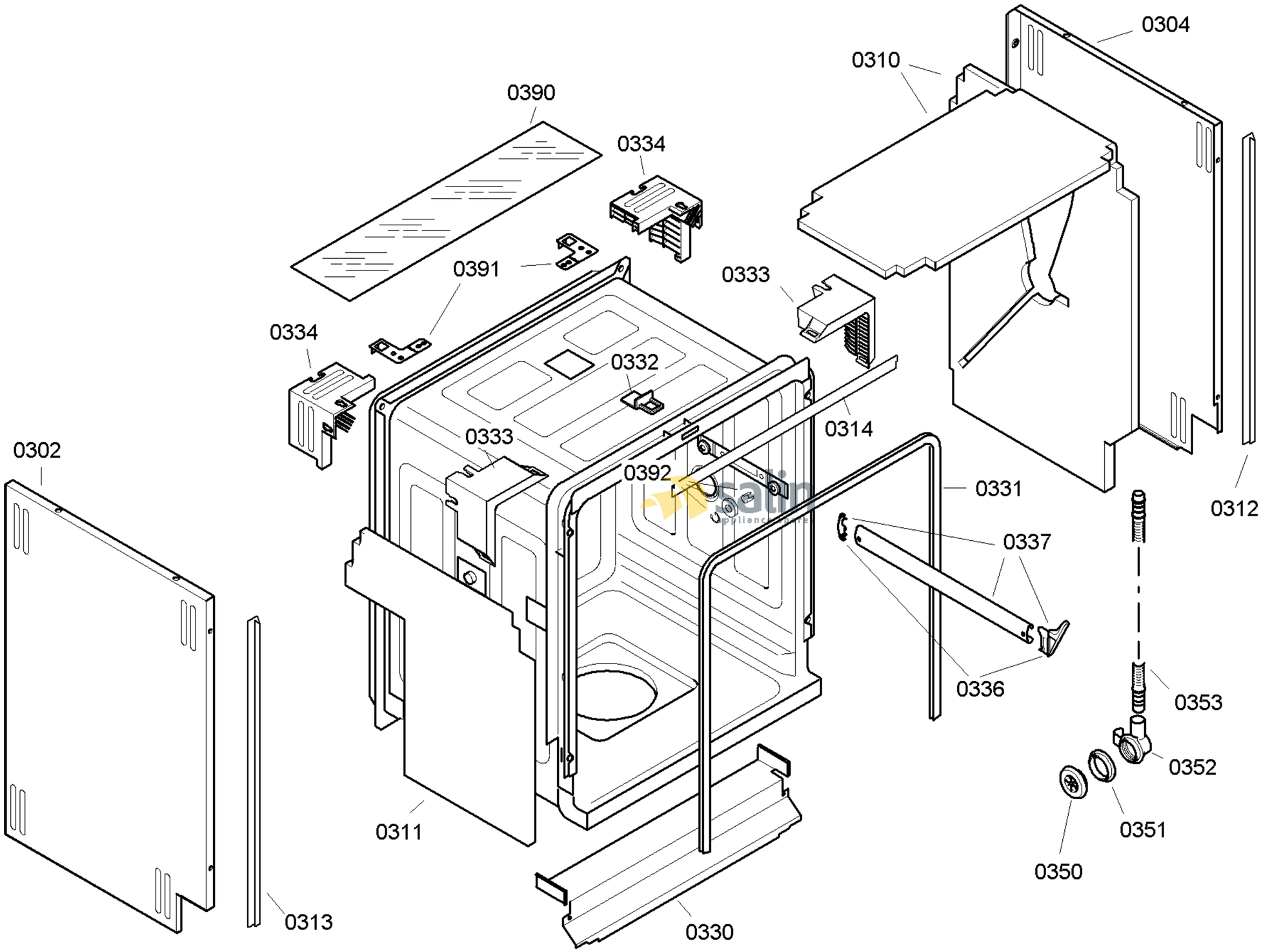

58300000119733 aet 000 a 3/6

FAMILY : SGU55E28SK
MODEL NO: SGU55E28SK/73
Check Position No/Part No or Replacement No

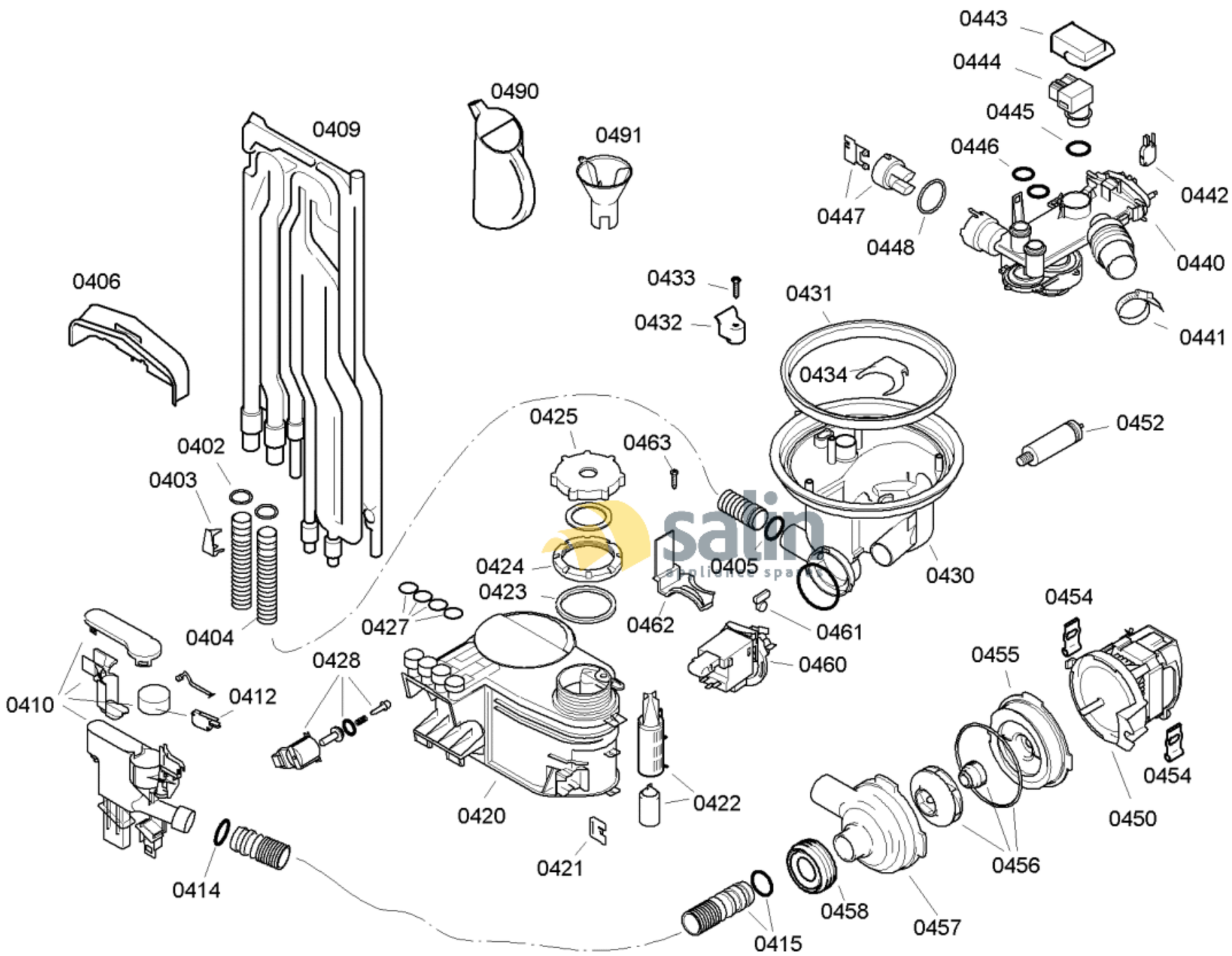

58300000119733 aet 000 a 4/6

FAMILY : SGU55E28SK

MODEL NO: SGU55E28SK/73

Check Position No/Part No or Replacement No

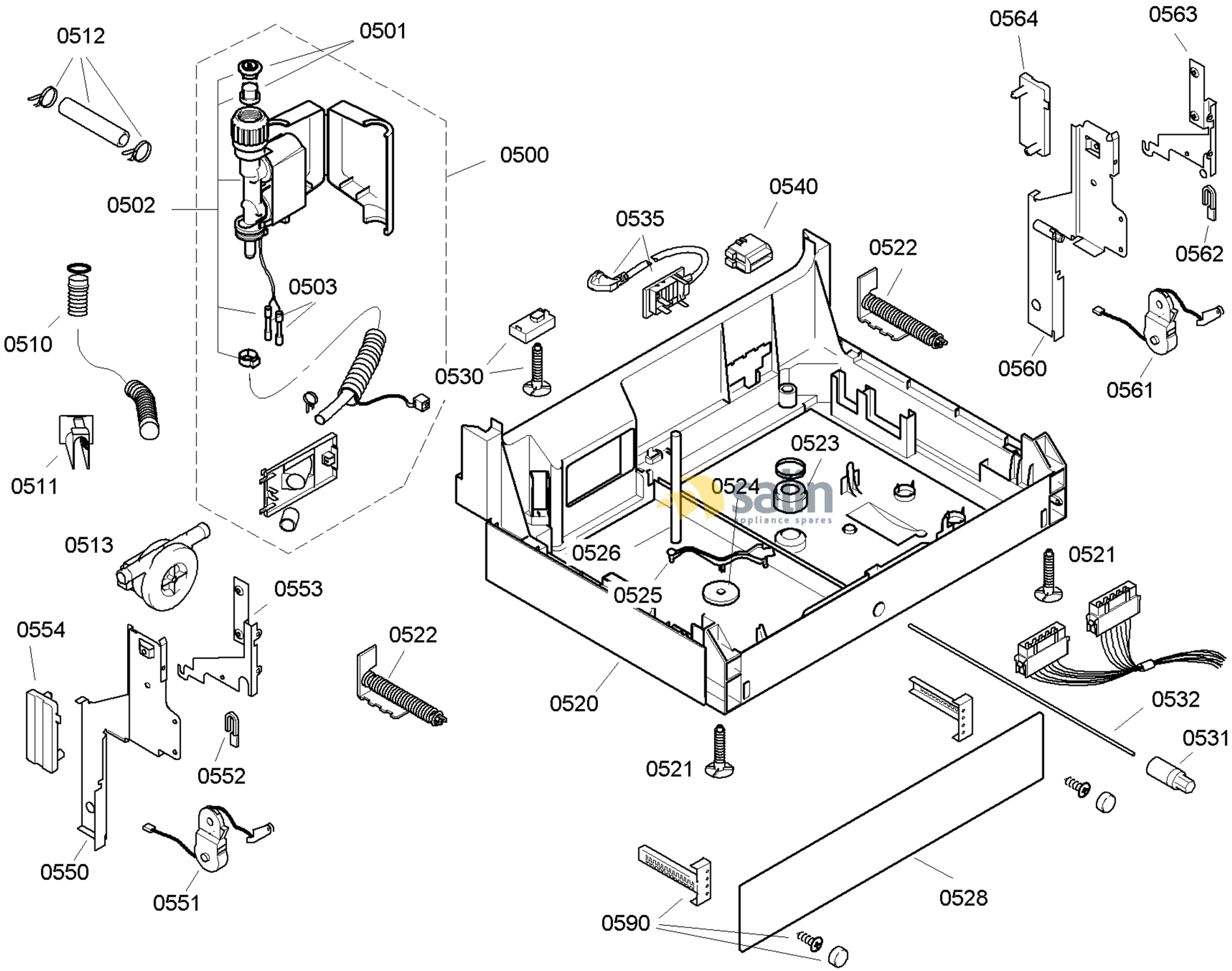

58300000119733 aet 000 a 5/6

FAMILY : SGU55E28SK
MODEL NO: SGU55E28SK/73
Check Position No/Part No or Replacement No

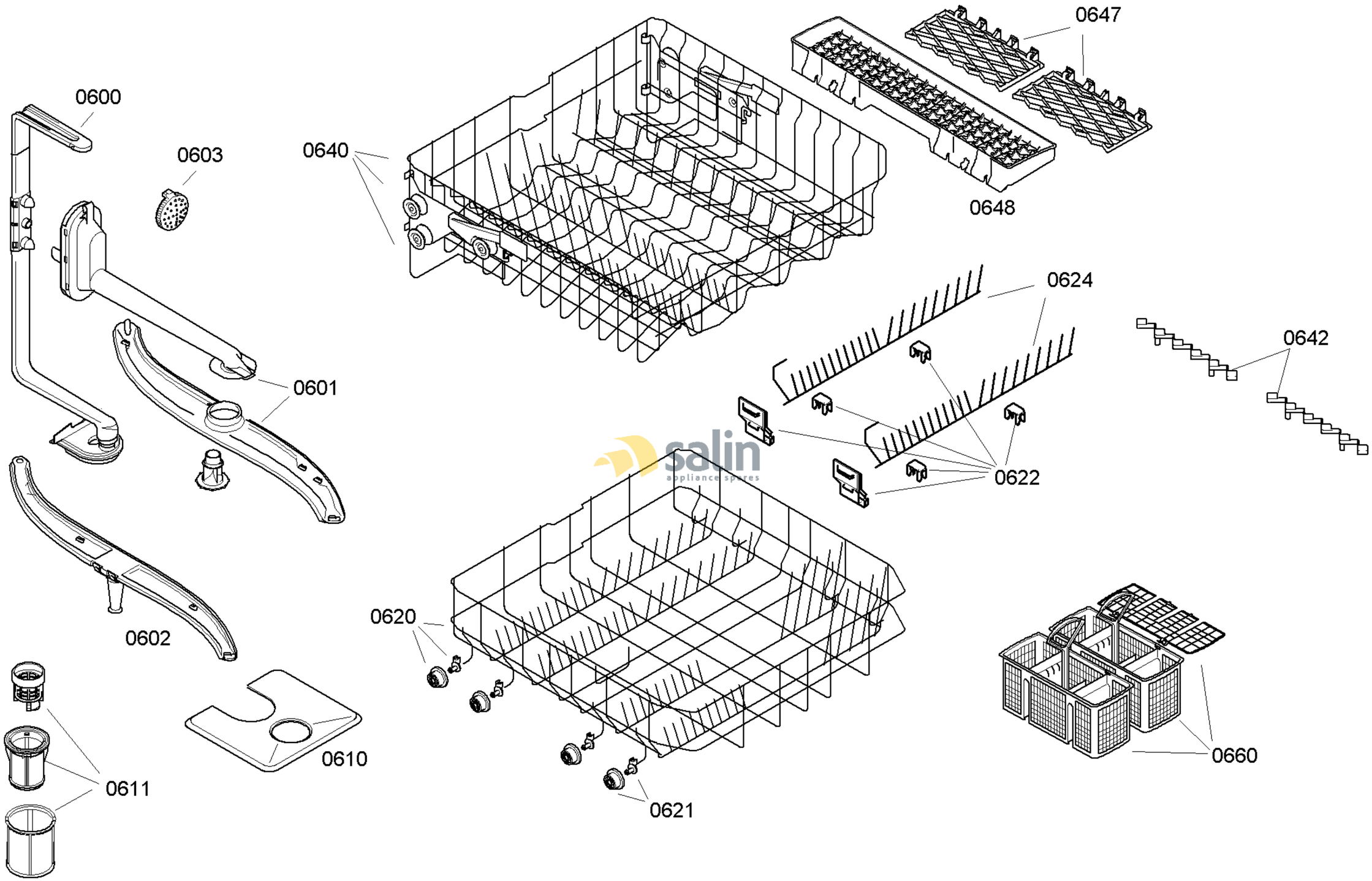

58300000119733 aet 000 a 6/6

FAMILY : SGU55E28SK
MODEL NO: SGU55E28SK/73
Check Position No/Part No or Replacement No