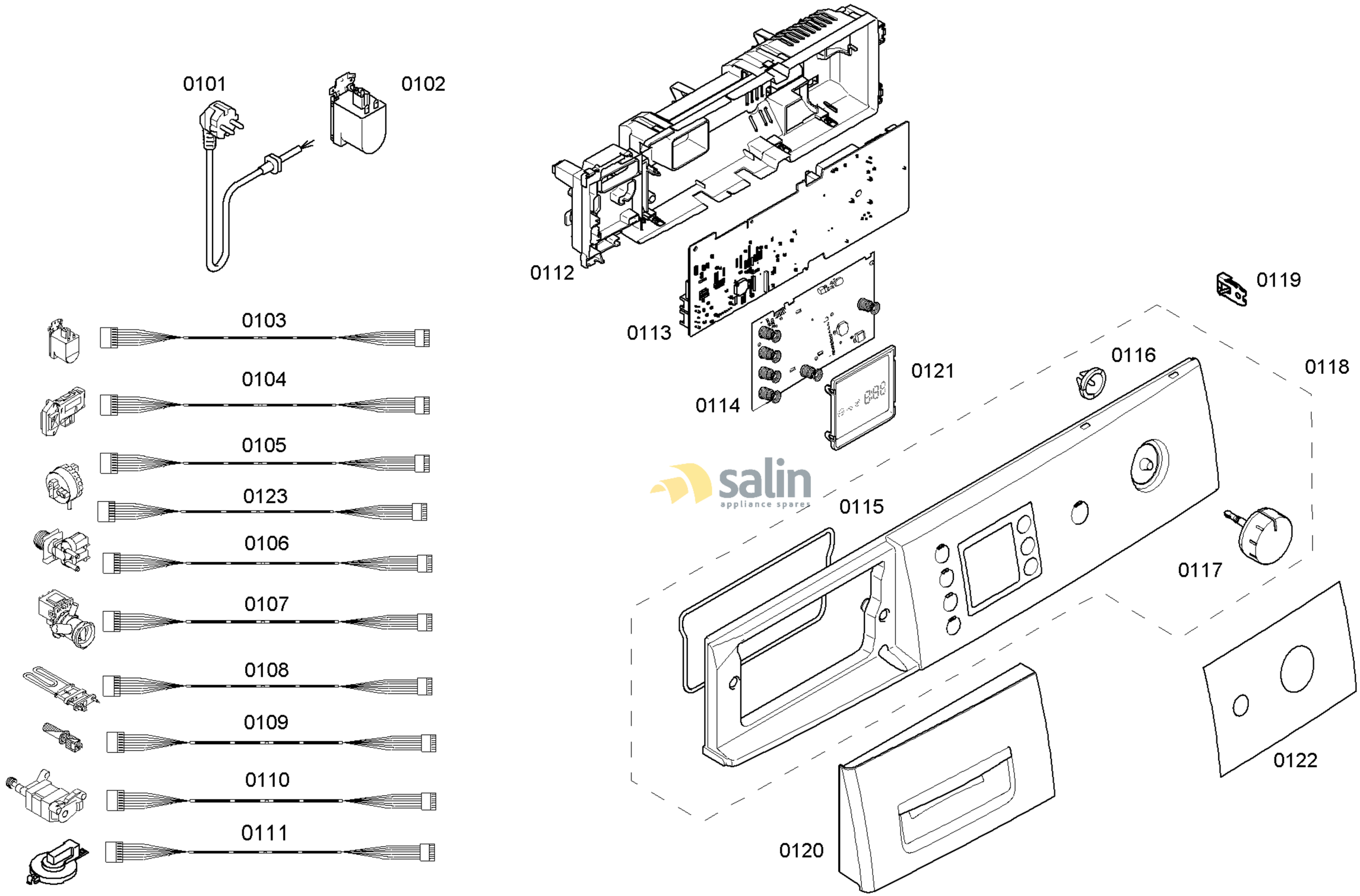

58300000129263 aet 000 b 1/5

FAMILY : WAE16441OE
MODEL NO: WAE16441OE/10
Check Position No/Part No or Replacement No

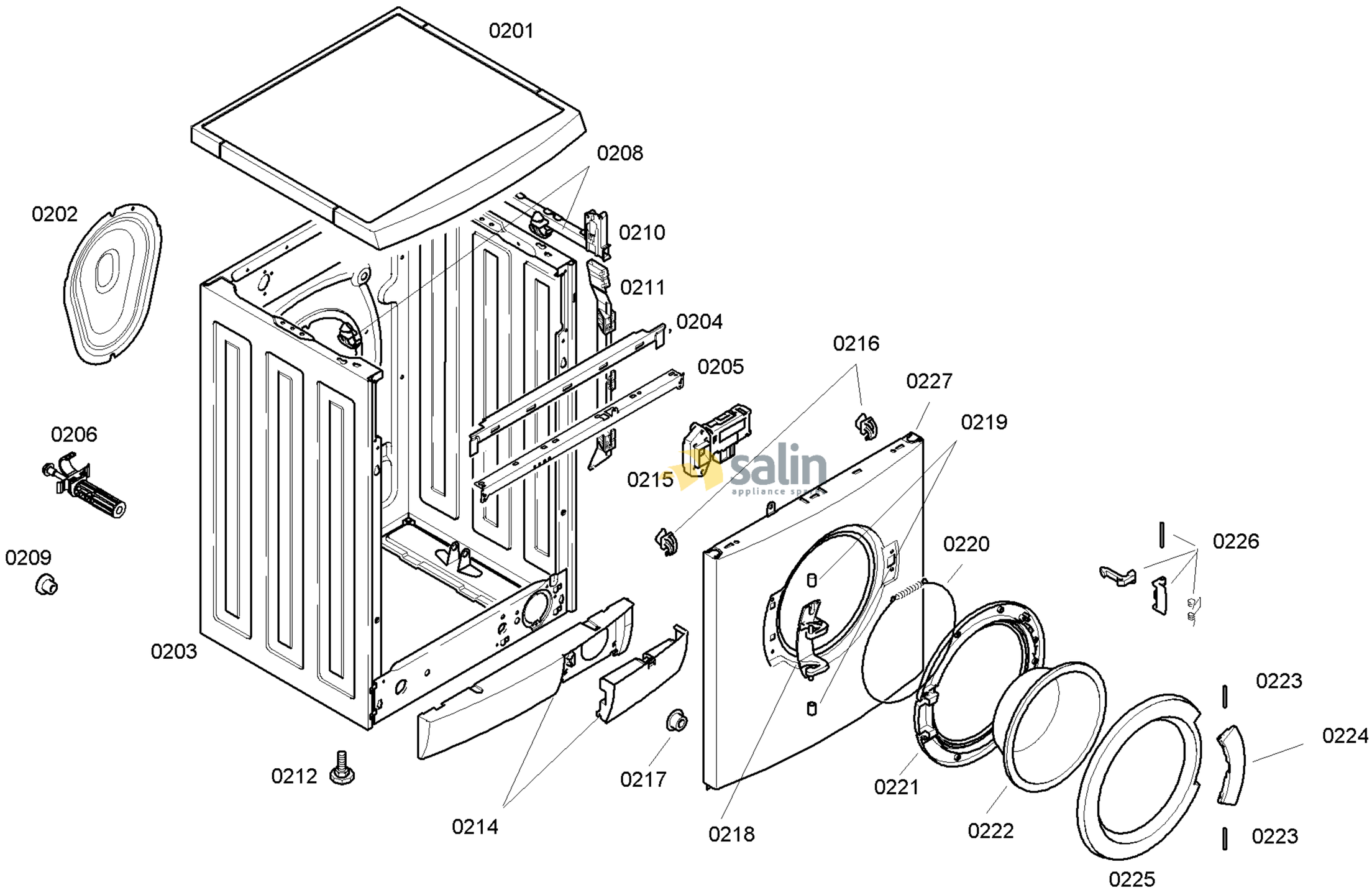

58300000129263 aet 000 b 2/5

FAMILY : WAE16441OE
MODEL NO: WAE16441OE/10
Check Position No/Part No or Replacement No

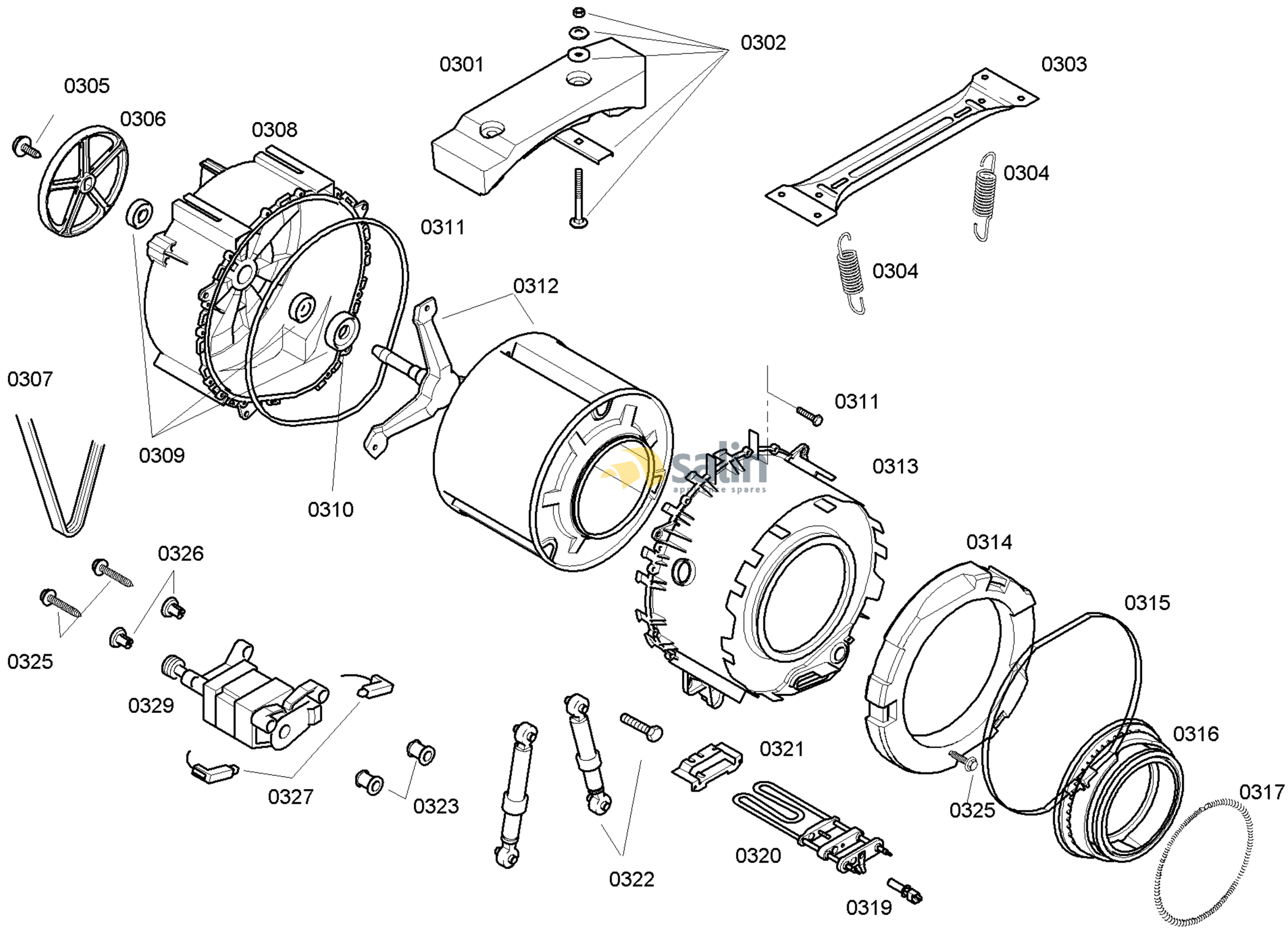

58300000129263 aet 000 b 3/5

FAMILY : WAE16441OE
MODEL NO: WAE16441OE/10
Check Position No/Part No or Replacement No

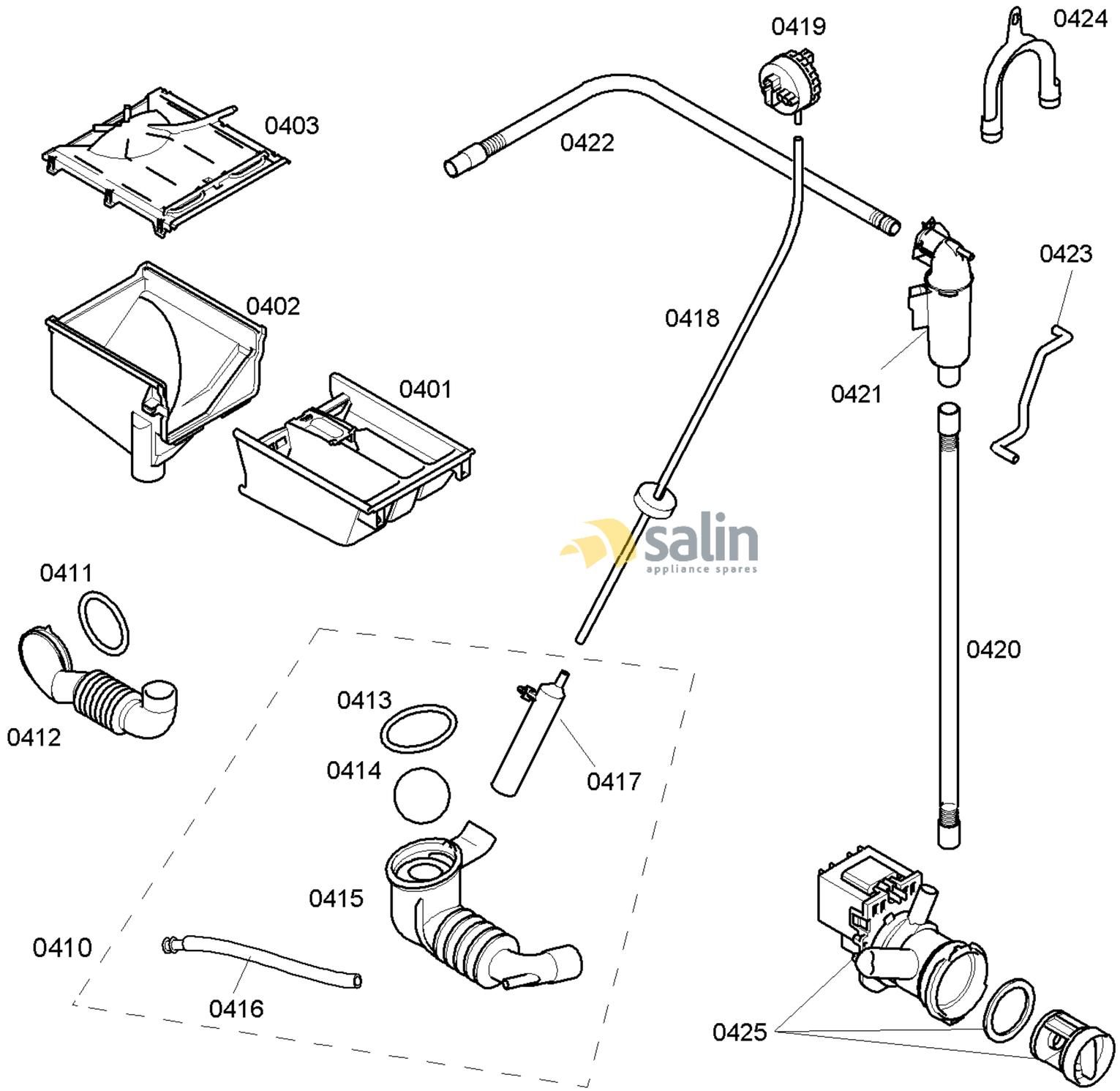

58300000129263 aet 000 b 4/5

FAMILY : WAE16441OE
MODEL NO: WAE16441OE/10
Check Position No/Part No or Replacement No

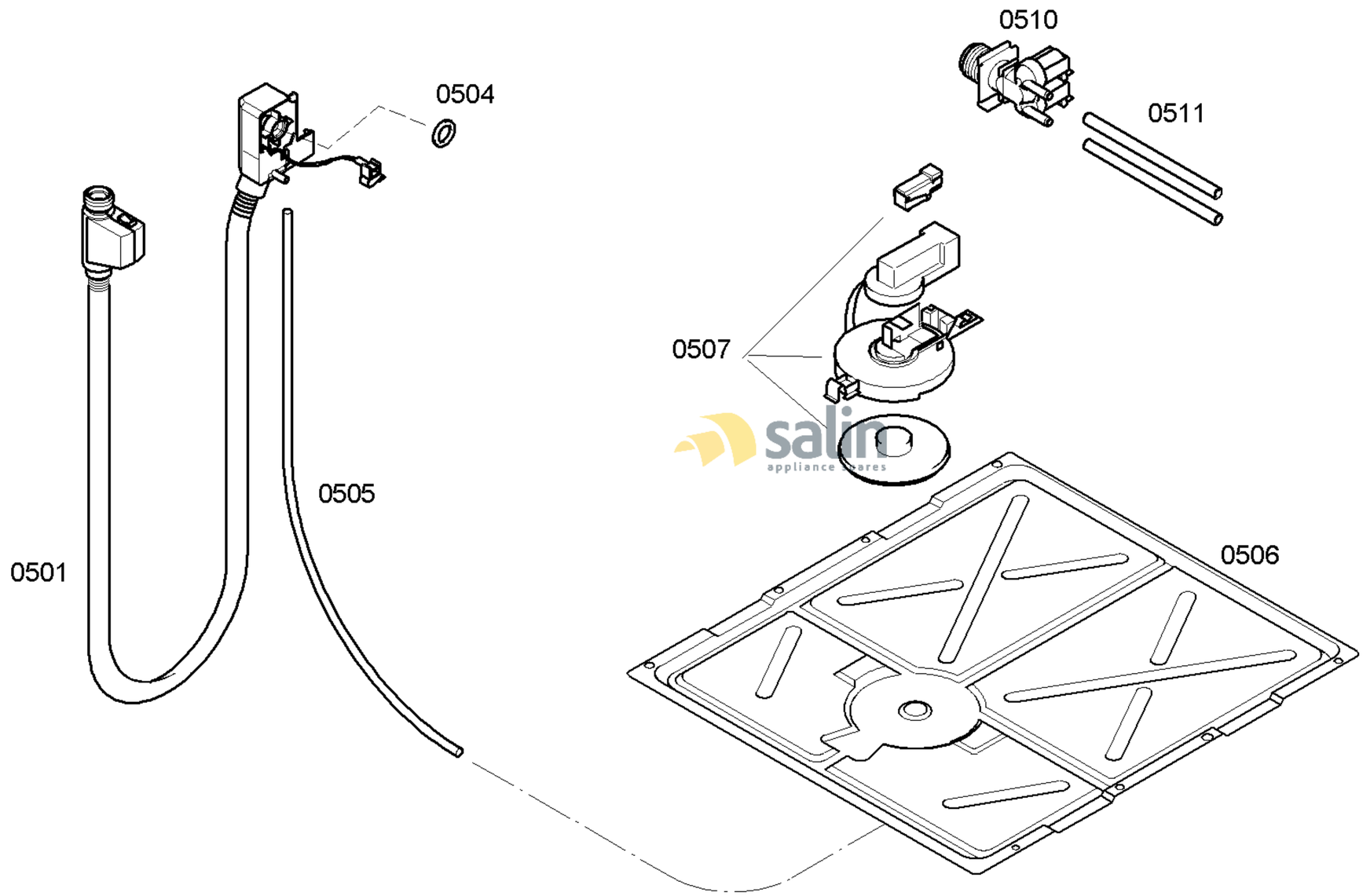

58300000129263 aet 000 b 5/5

FAMILY : WAE16441OE
MODEL NO: WAE16441OE/10
Check Position No/Part No or Replacement No