0199

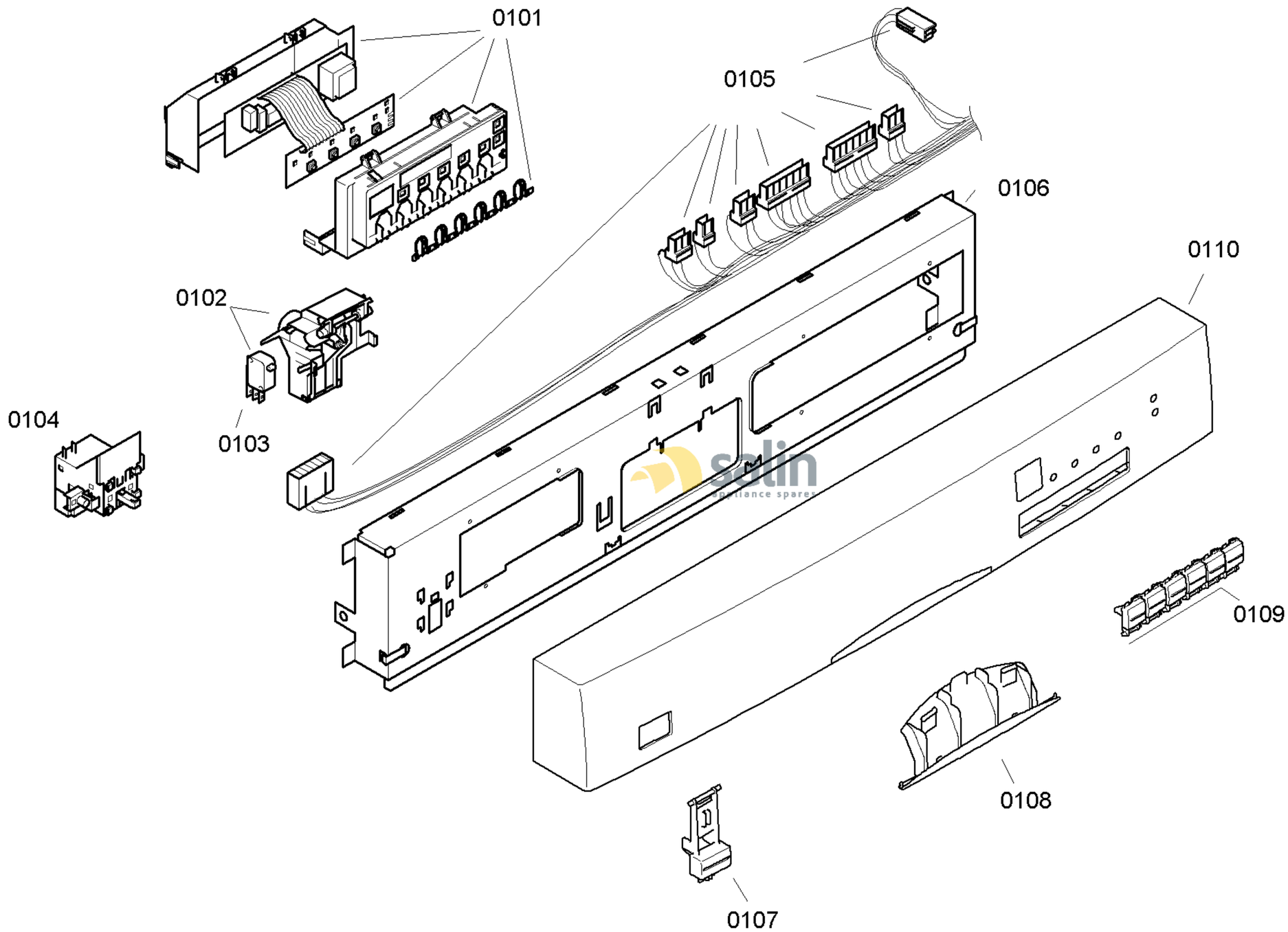

58300000130724 aet 000 a 1/6

FAMILY : SGS45M32II
MODEL NO: SGS45M32II/90
Check Position No/Part No or Replacement No

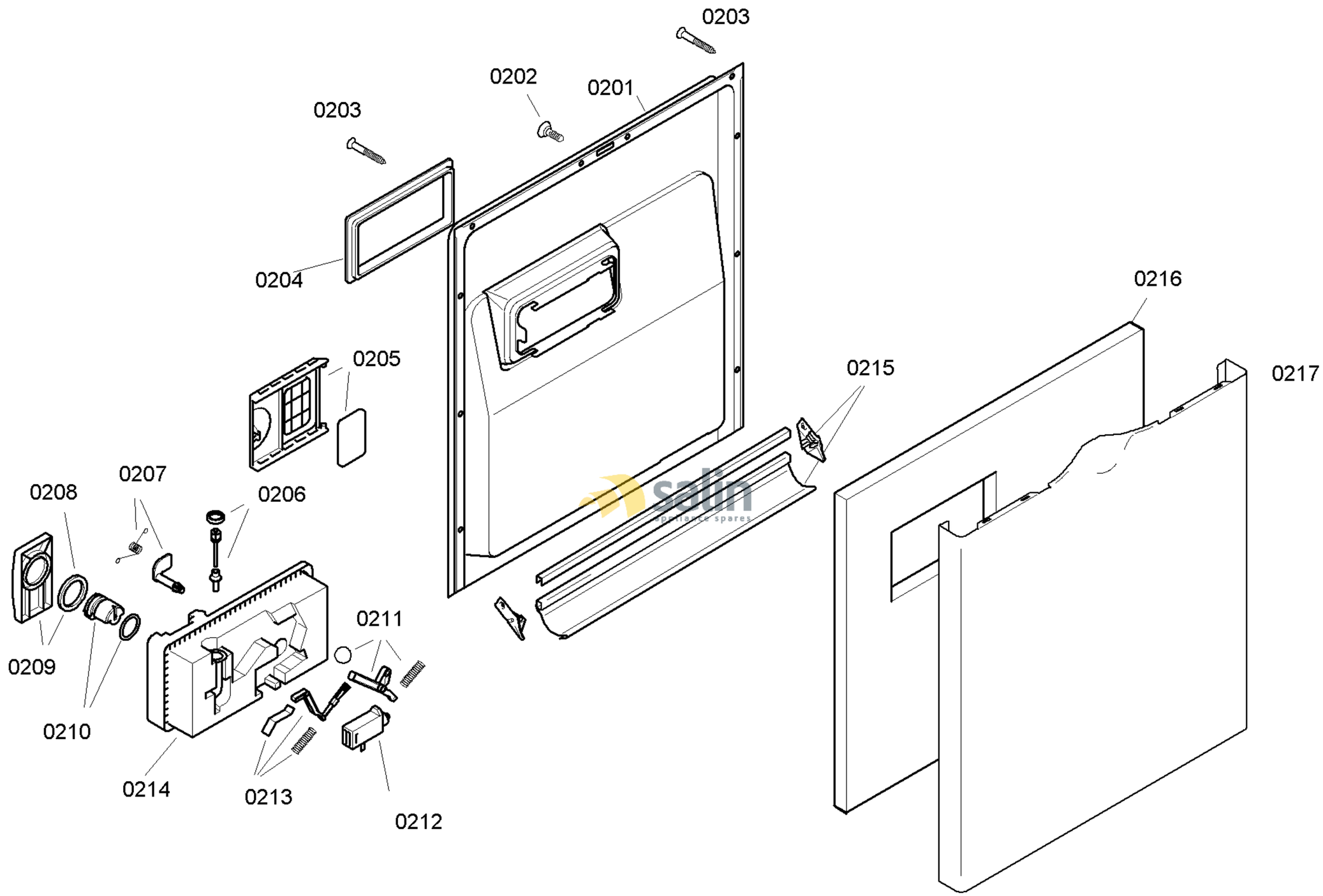

58300000130724 aet 000 a 2/6

FAMILY : SGS45M32II
MODEL NO: SGS45M32II/90
Check Position No/Part No or Replacement No

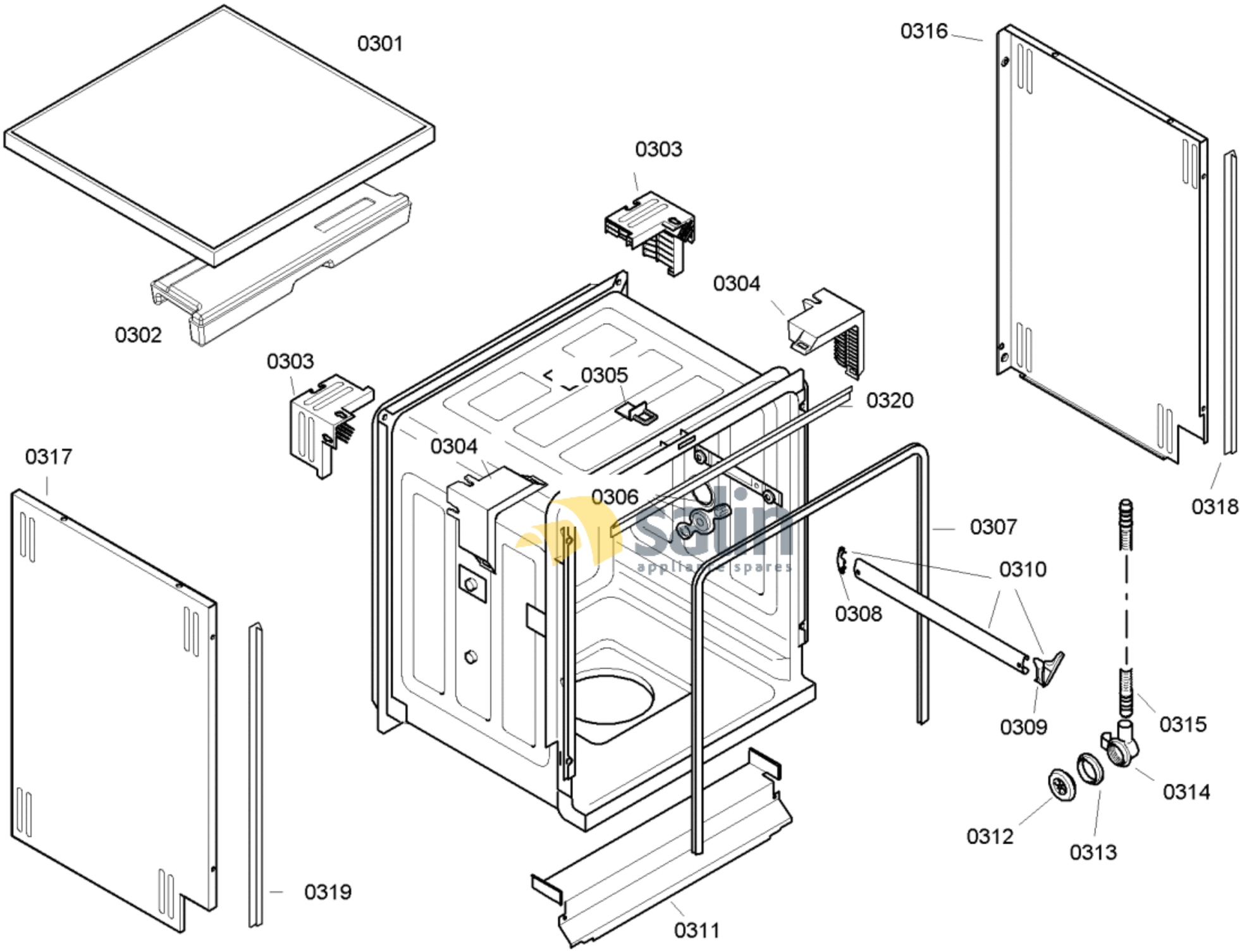

58300000130724 aet 000 a 3/6

FAMILY : SGS45M32II

MODEL NO: SGS45M32II/90

Check Position No/Part No or Replacement No

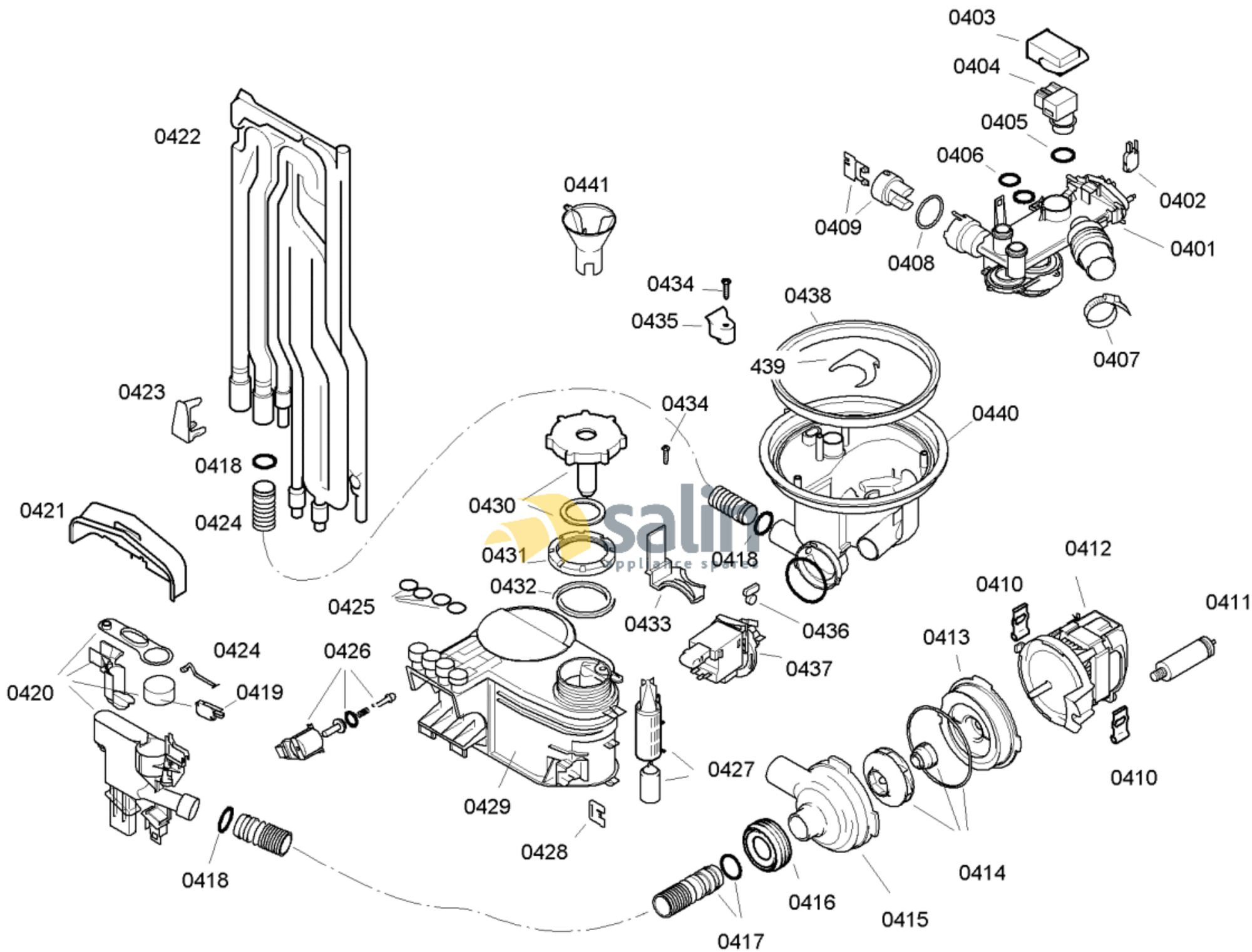

58300000130724 aet 000 a 4/6

FAMILY : SGS45M32II

MODEL NO: SGS45M32II/90

Check Position No/Part No or Replacement No

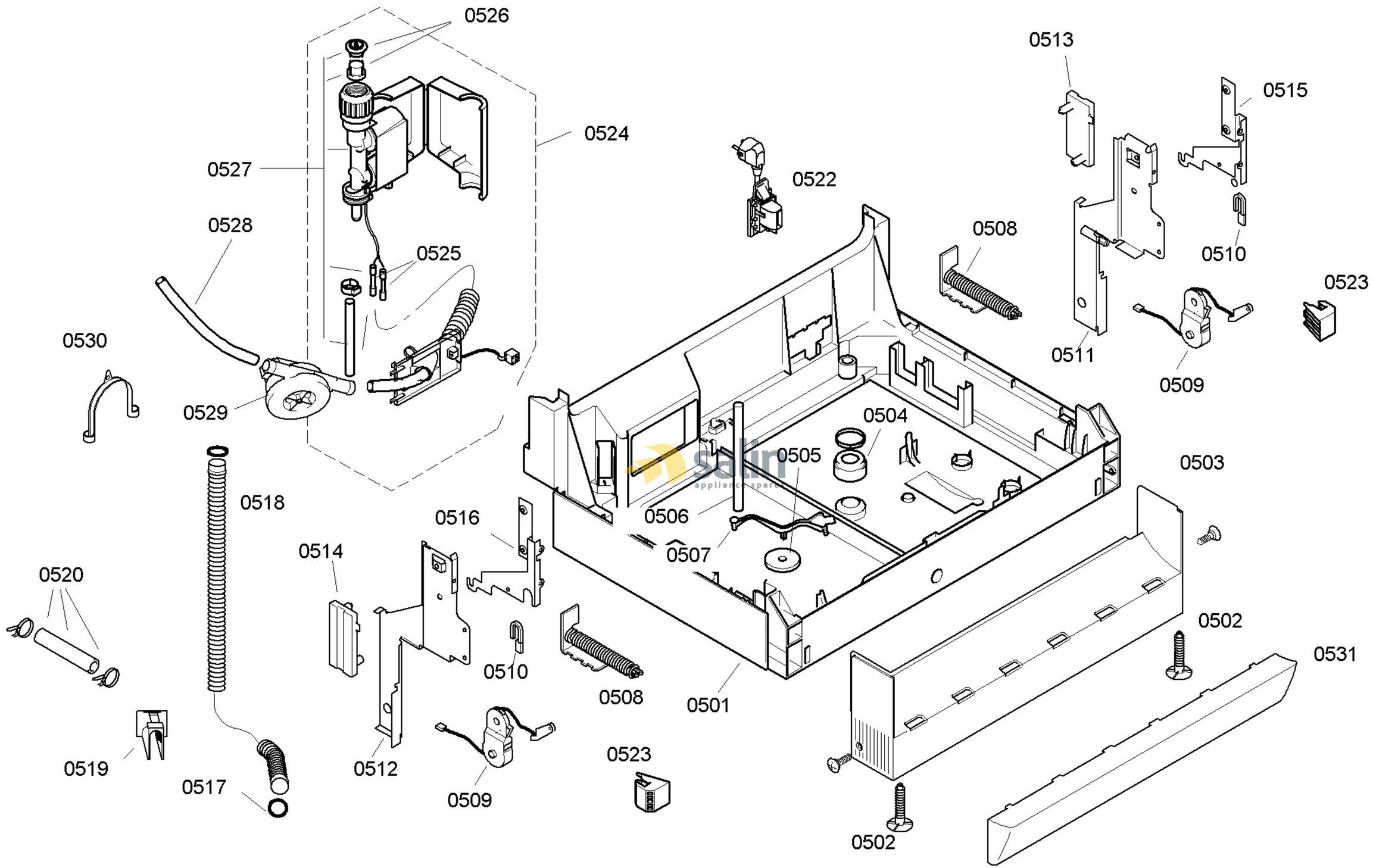

58300000130724 aet 000 a 5/6

FAMILY : SGS45M32II
MODEL NO: SGS45M32II/90
Check Position No/Part No or Replacement No

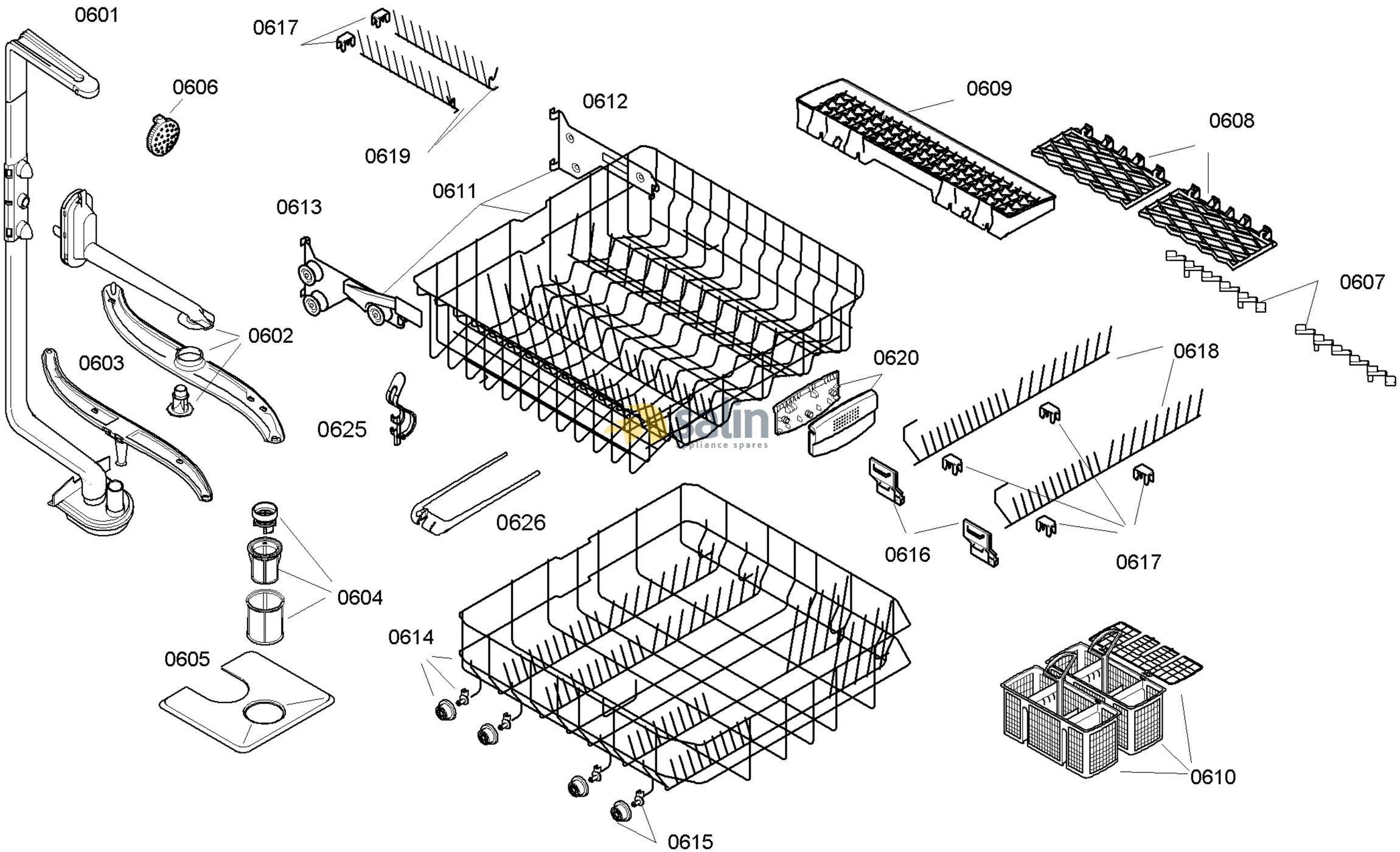

58300000130724 aet 000 a 6/6

FAMILY : SGS45M32II
MODEL NO: SGS45M32II/90
Check Position No/Part No or Replacement No