0199

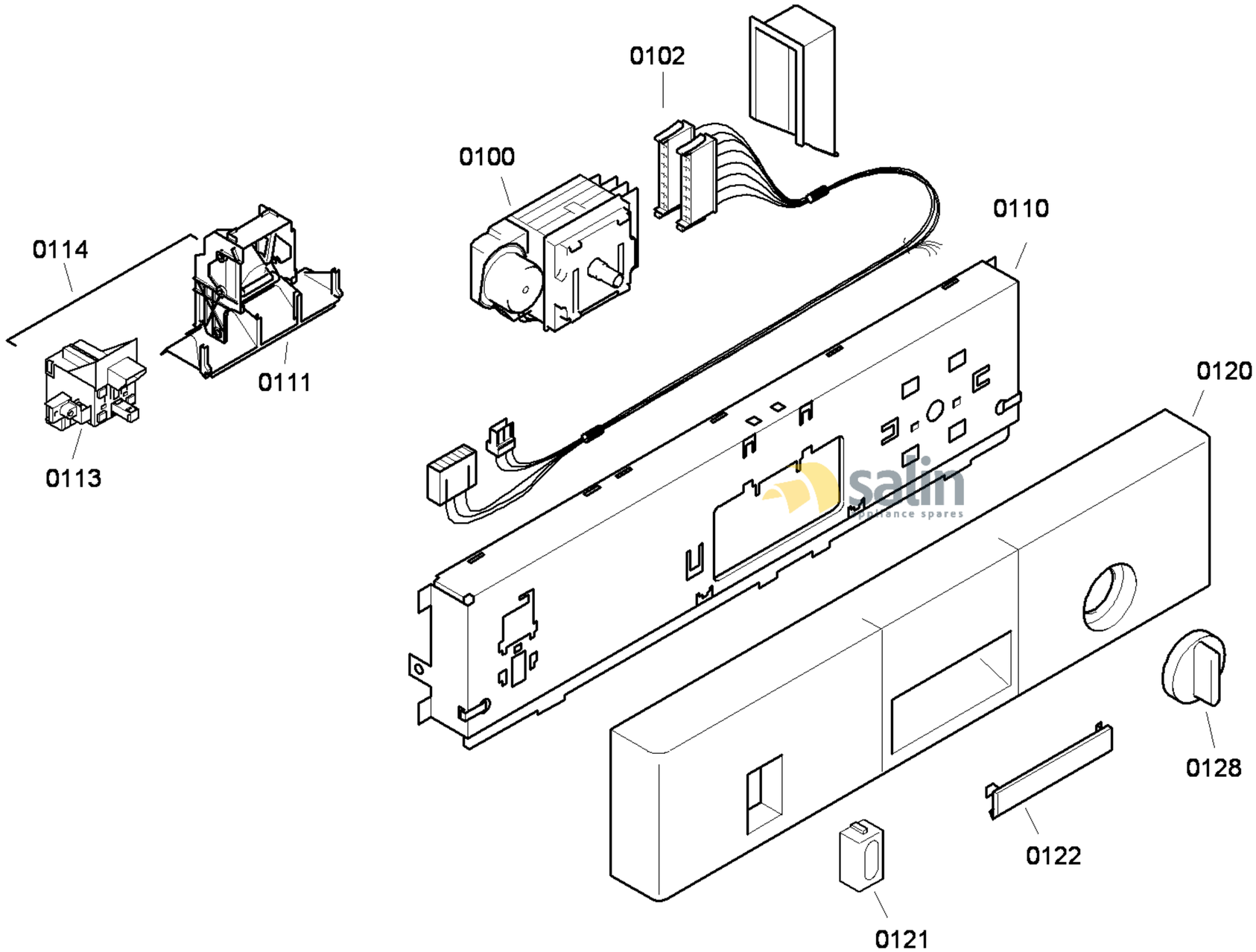

58300000144969 aet 000 a 1/6

FAMILY : SRU40E02SK
MODEL NO: SRU40E02SK/44
Check Position No/Part No or Replacement No

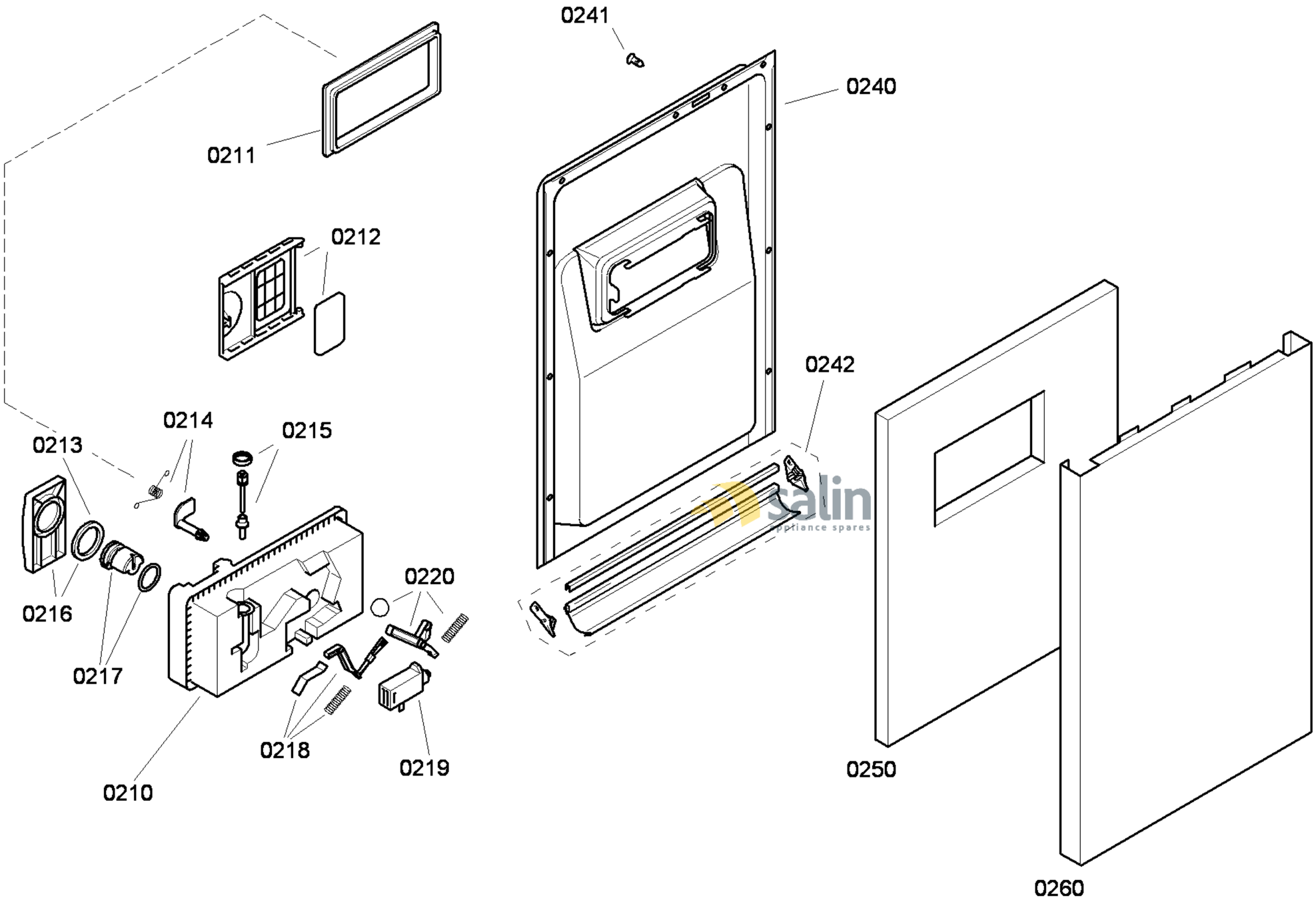

58300000144969 aet 000 a 2/6

FAMILY : SRU40E02SK
MODEL NO: SRU40E02SK/44
Check Position No/Part No or Replacement No

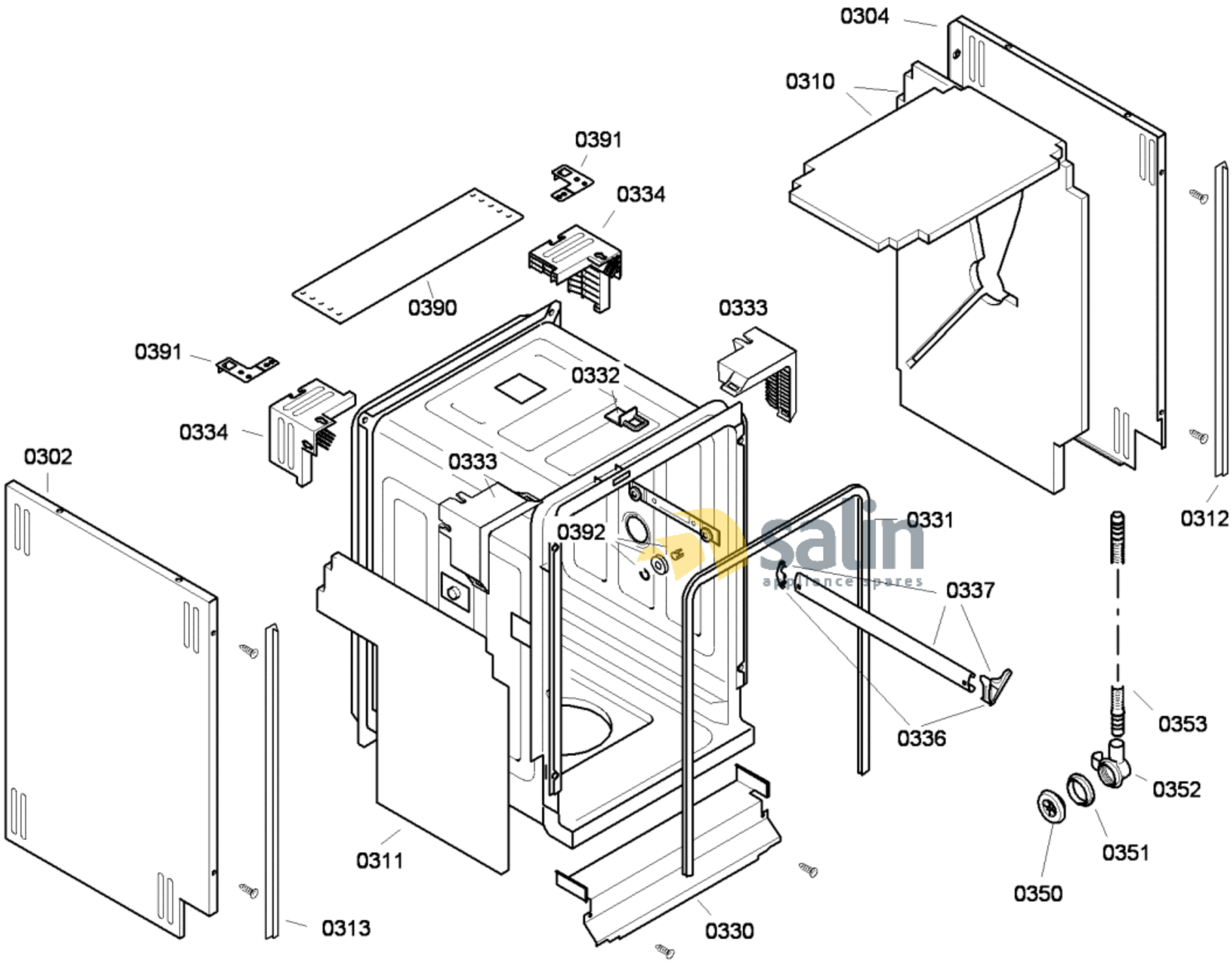

58300000144969 aet 000 a 3/6

FAMILY : SRU40E02SK

MODEL NO: SRU40E02SK/44

Check Position No/Part No or Replacement No

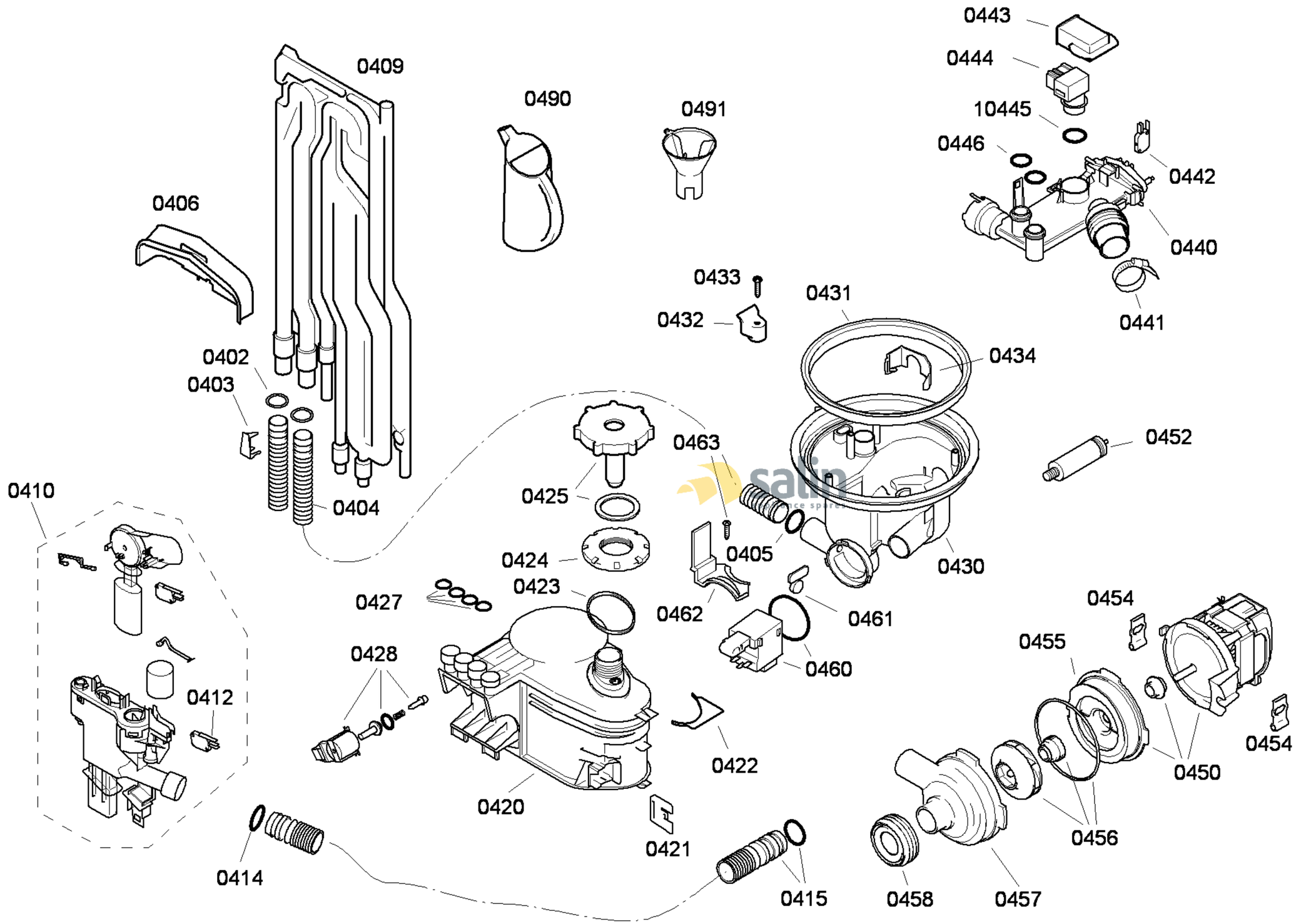

583000001 44969 aet 000 a 4/6

FAMILY : SRU40E02SK
MODEL NO: SRU40E02SK/44
Check Position No/Part No or Replacement No

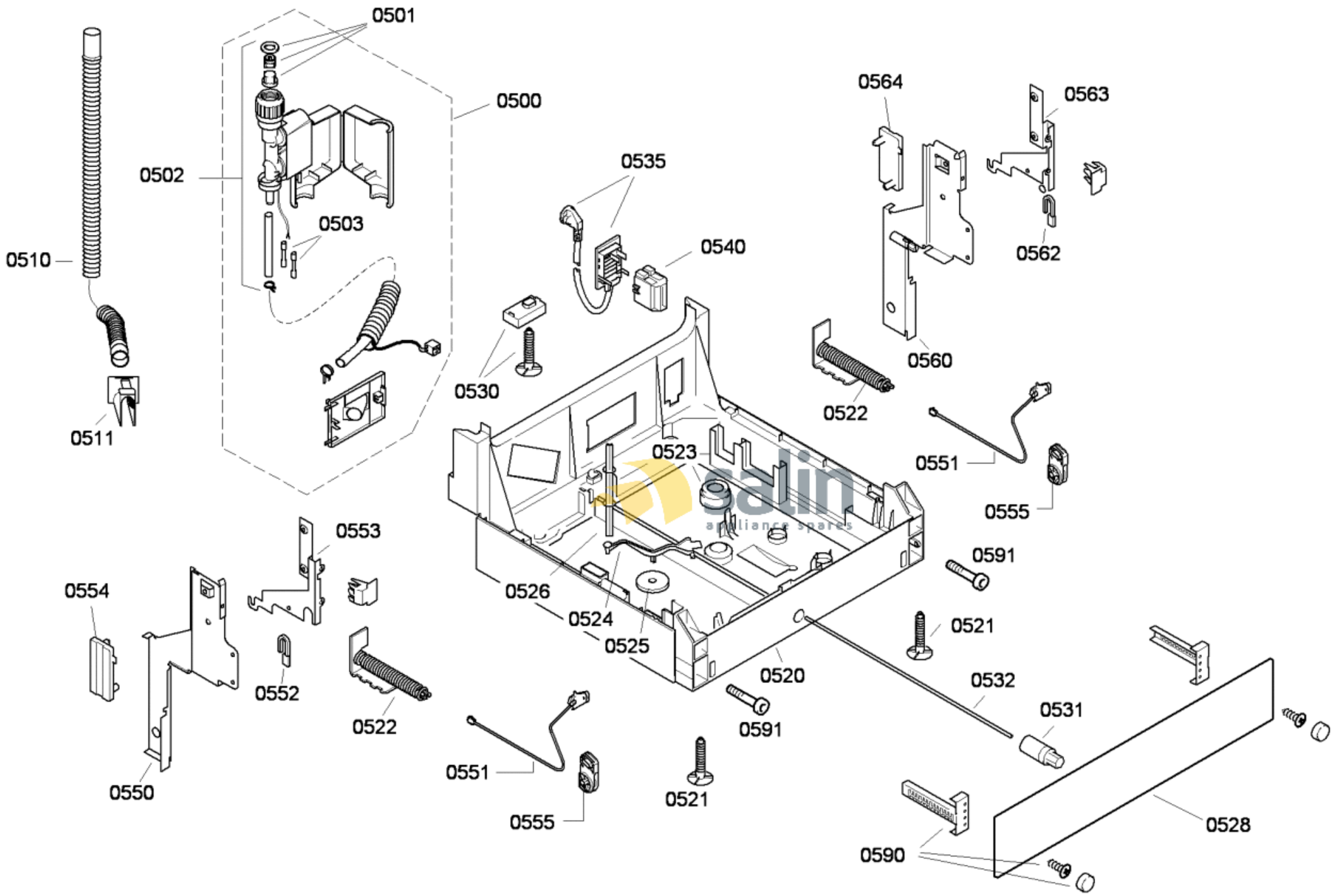

58300000144969 aet 000 a 5/6

FAMILY : SRU40E02SK

MODEL NO: SRU40E02SK/44

Check Position No/Part No or Replacement No

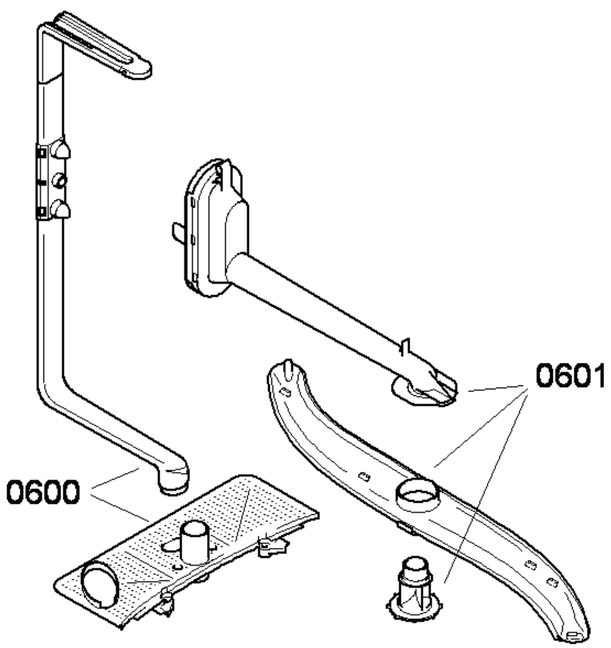

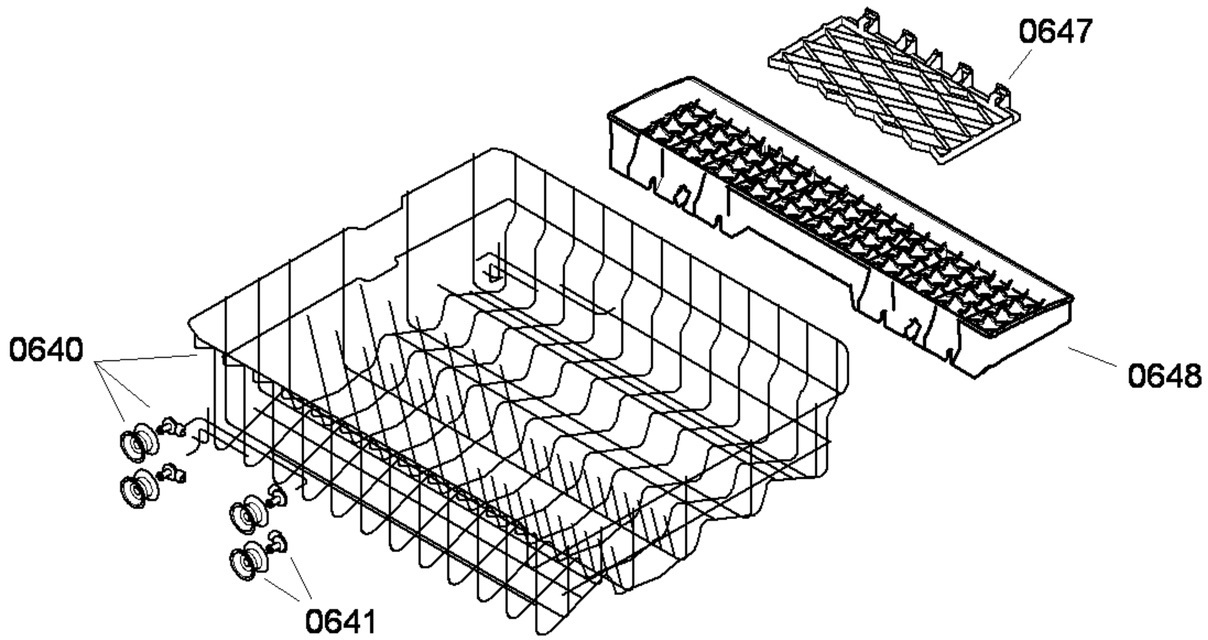

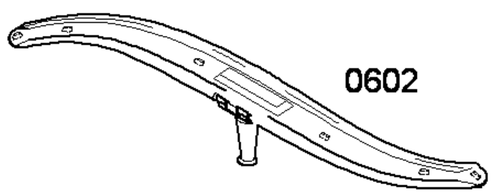

salin
appliance spares

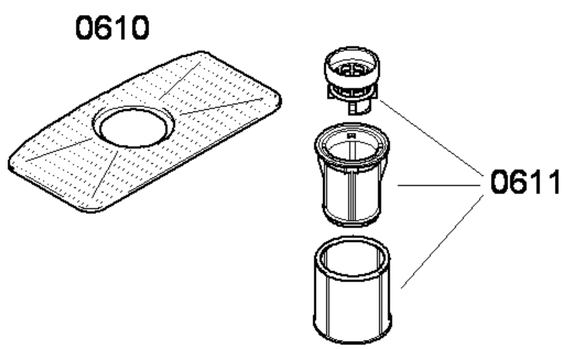

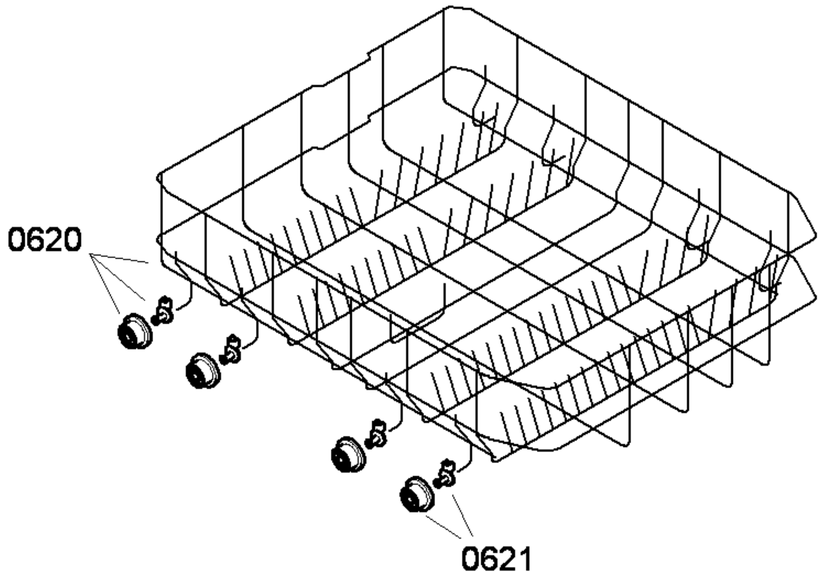

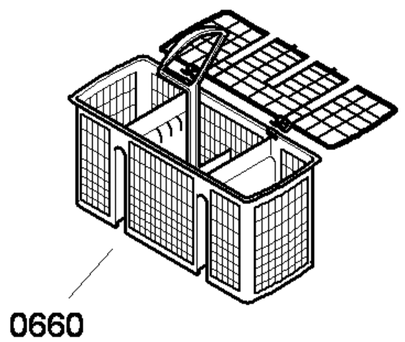

58300000144969 aet 000 a 6/6

FAMILY : SRU40E02SK
MODEL NO: SRU40E02SK/44
Check Position No/Part No or Replacement No