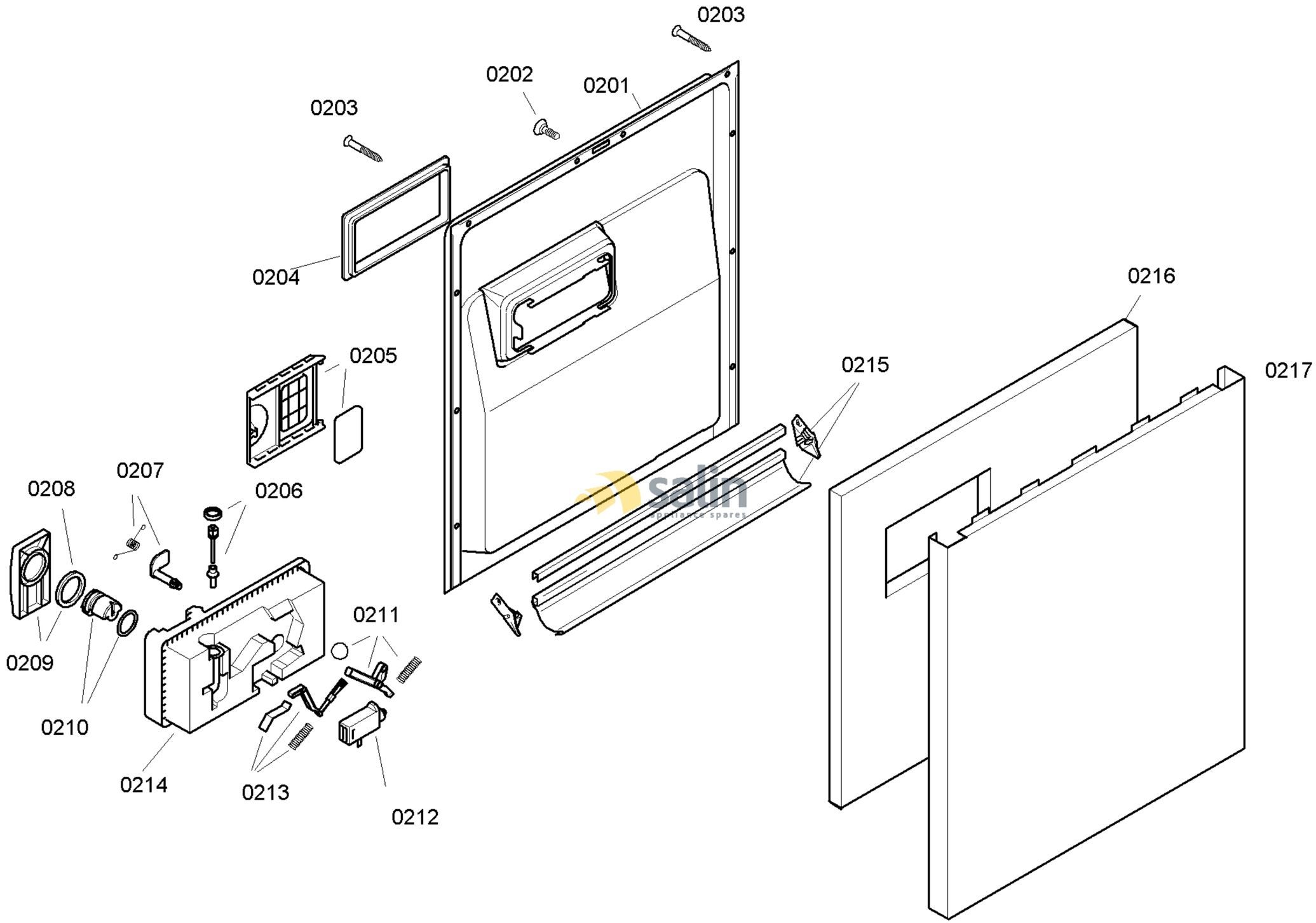

58300000130715 aet 000 a 2/6

FAMILY : SGS43E08II
MODEL NO: SGS43E08II/90
Check Position No/Part No or Replacement No

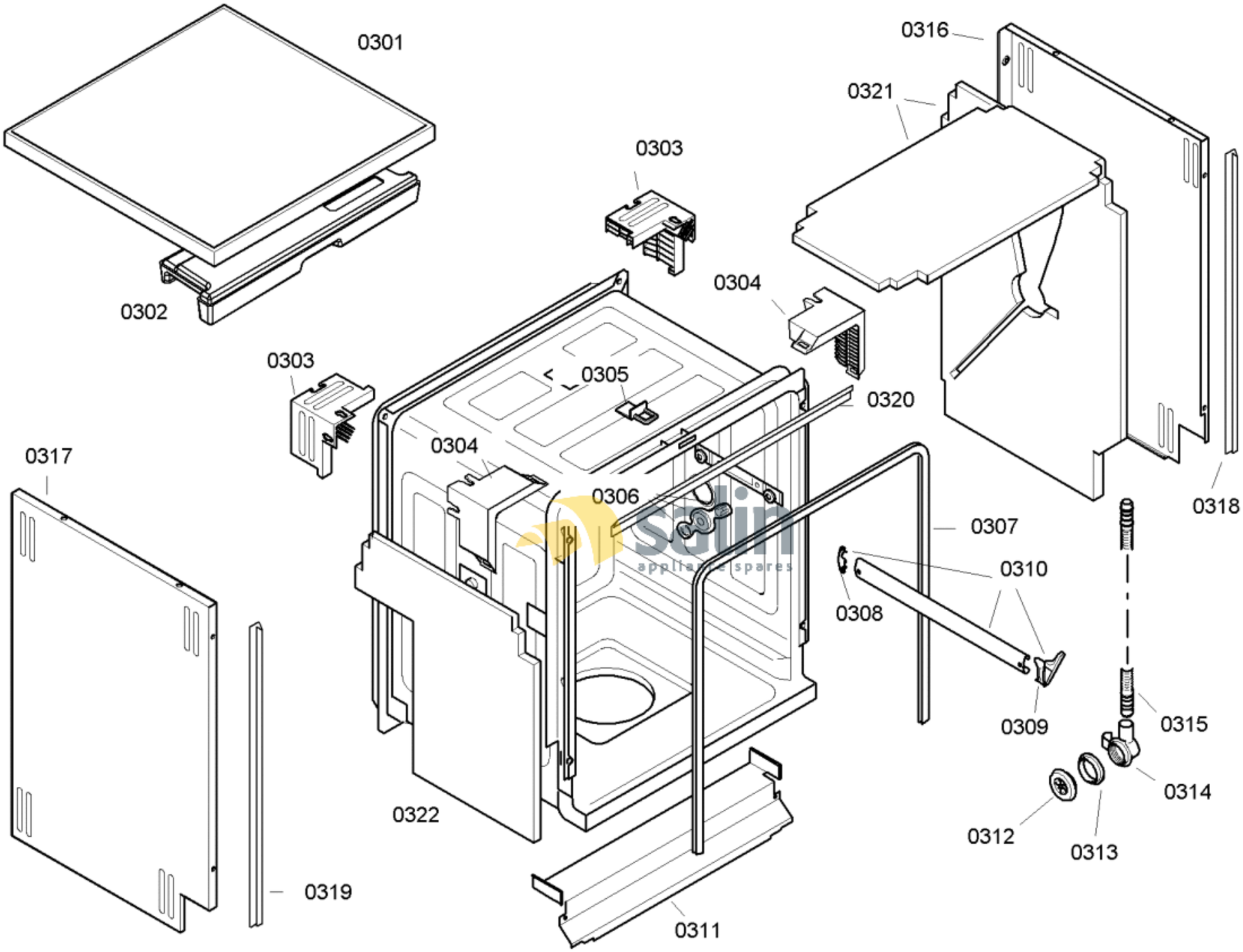

58300000130715 aet 000 a 3/6

FAMILY : SGS43E08II

MODEL NO: SGS43E08II/90

Check Position No/Part No or Replacement No

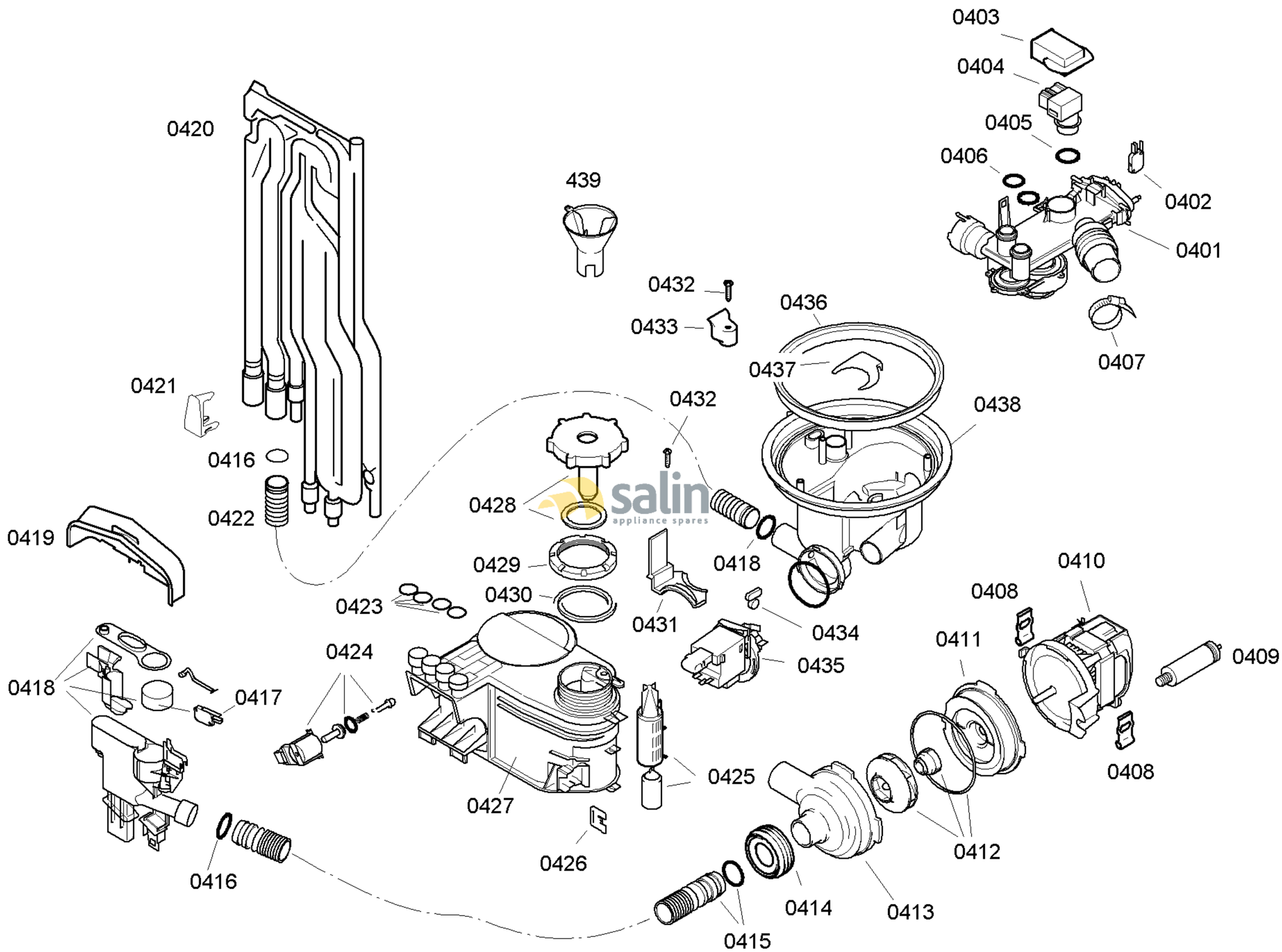

58300000130715 aet 000 a 4/6

FAMILY : SGS43E08II
MODEL NO: SGS43E08II/90
Check Position No/Part No or Replacement No

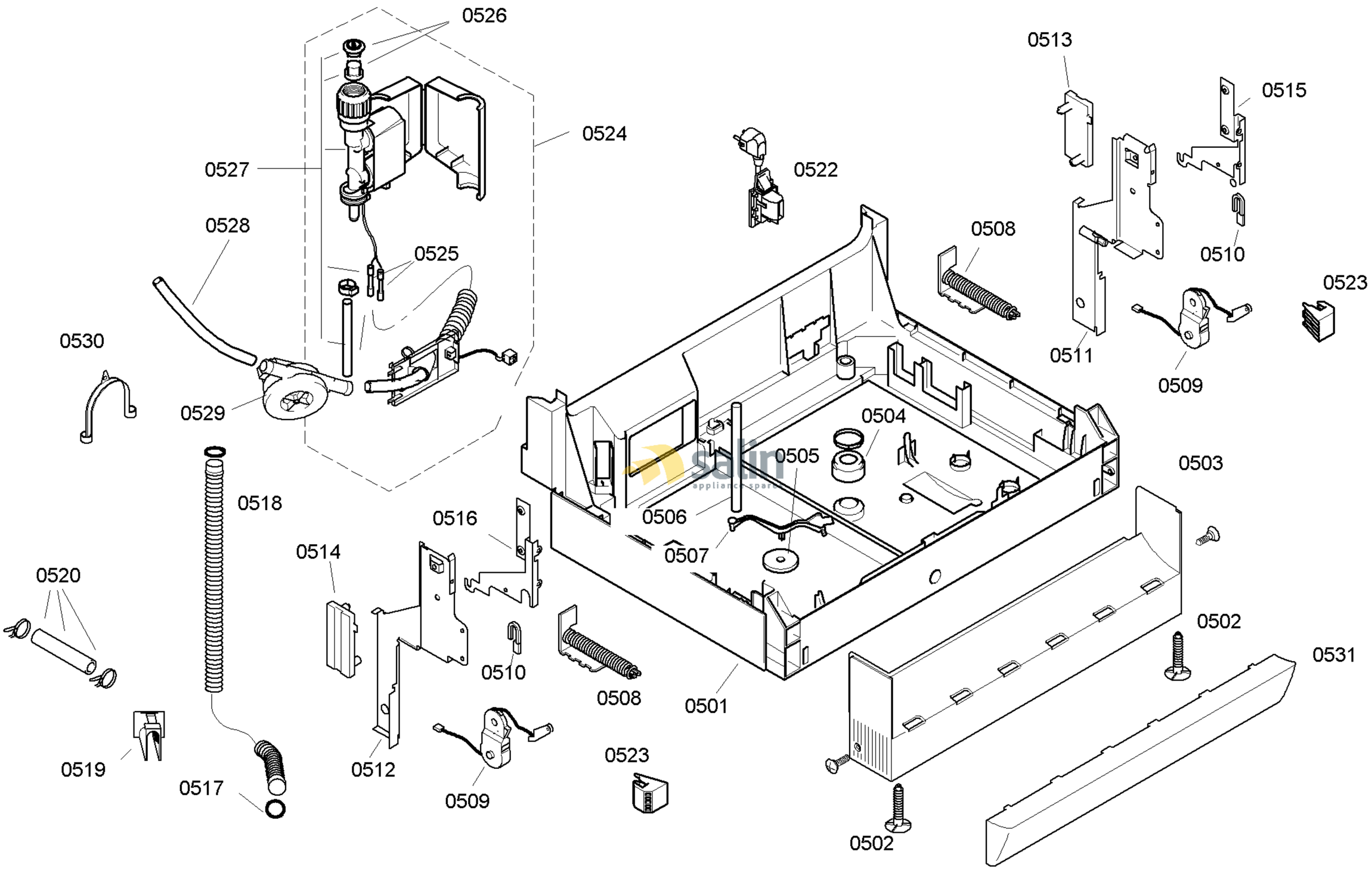

58300000130715 aet 000 a 5/6

FAMILY : SGS43E08II
MODEL NO: SGS43E08II/90
Check Position No/Part No or Replacement No

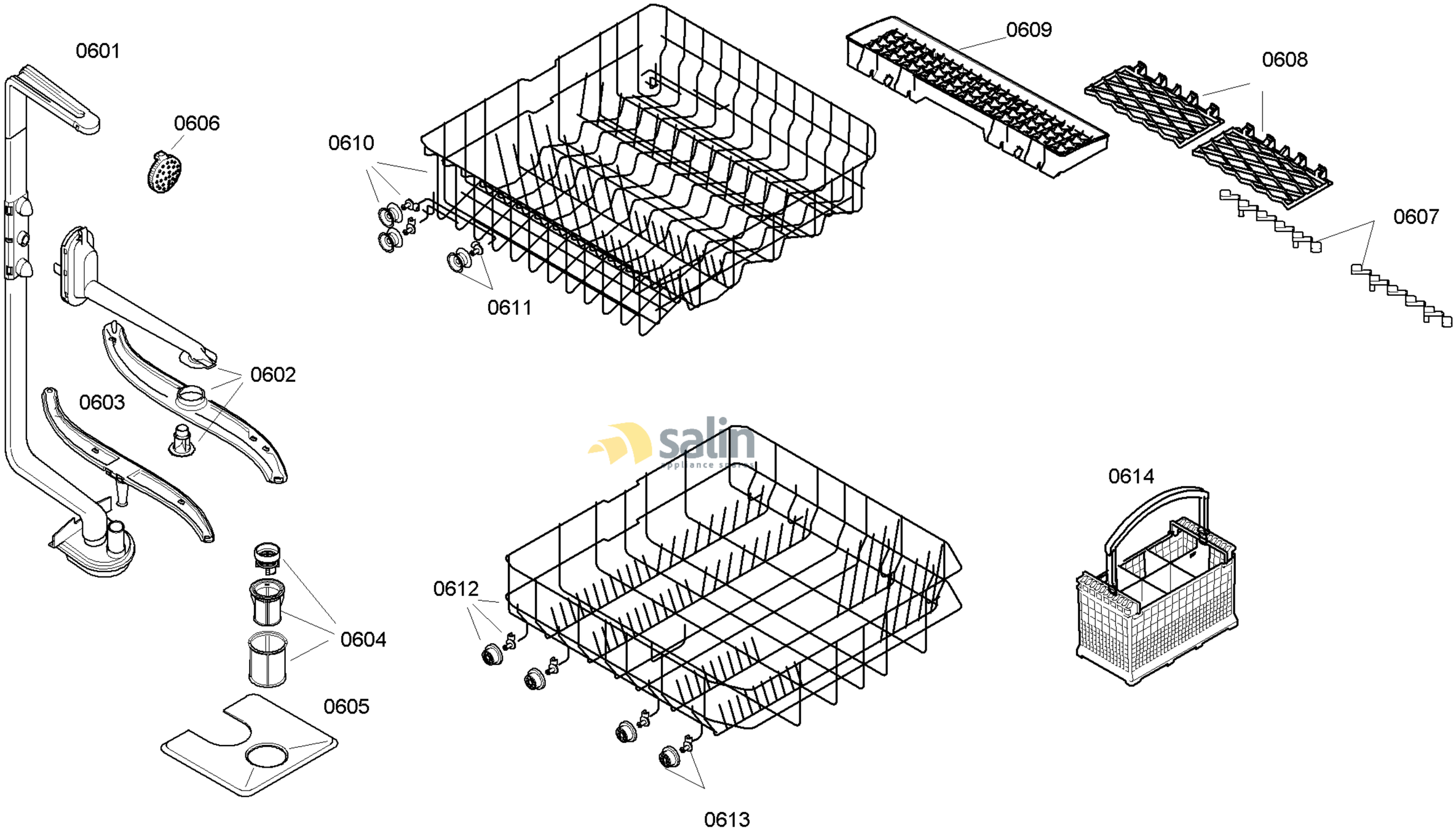

58300000130715 aet 000 a 6/6

FAMILY : SGS43E08II
MODEL NO: SGS43E08II/90
Check Position No/Part No or Replacement No