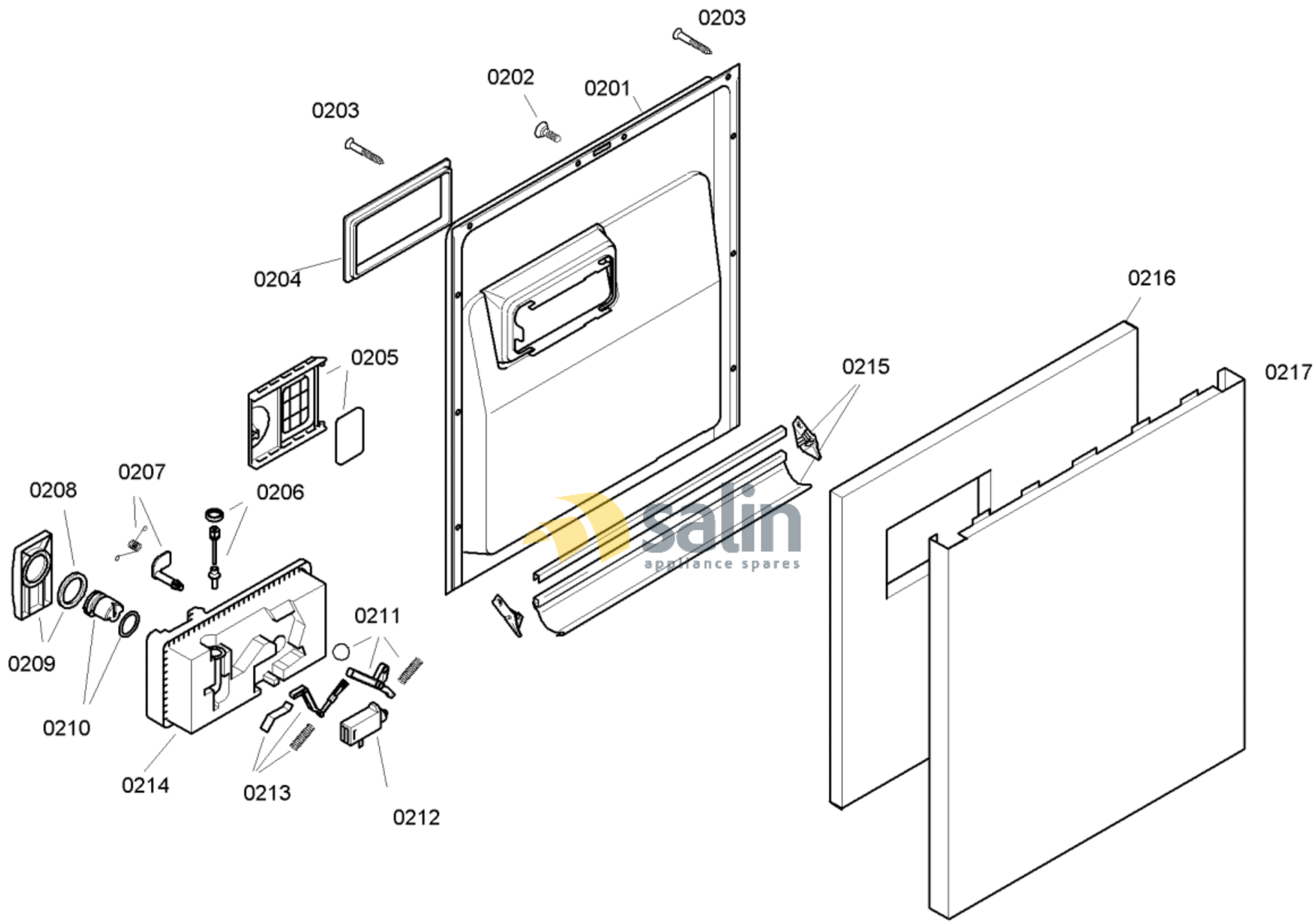

58300000119611 aet 000 c 2/6

FAMILY : SGS43E08II

MODEL NO: SGS43E08II/79

Check Position No/Part No or Replacement No

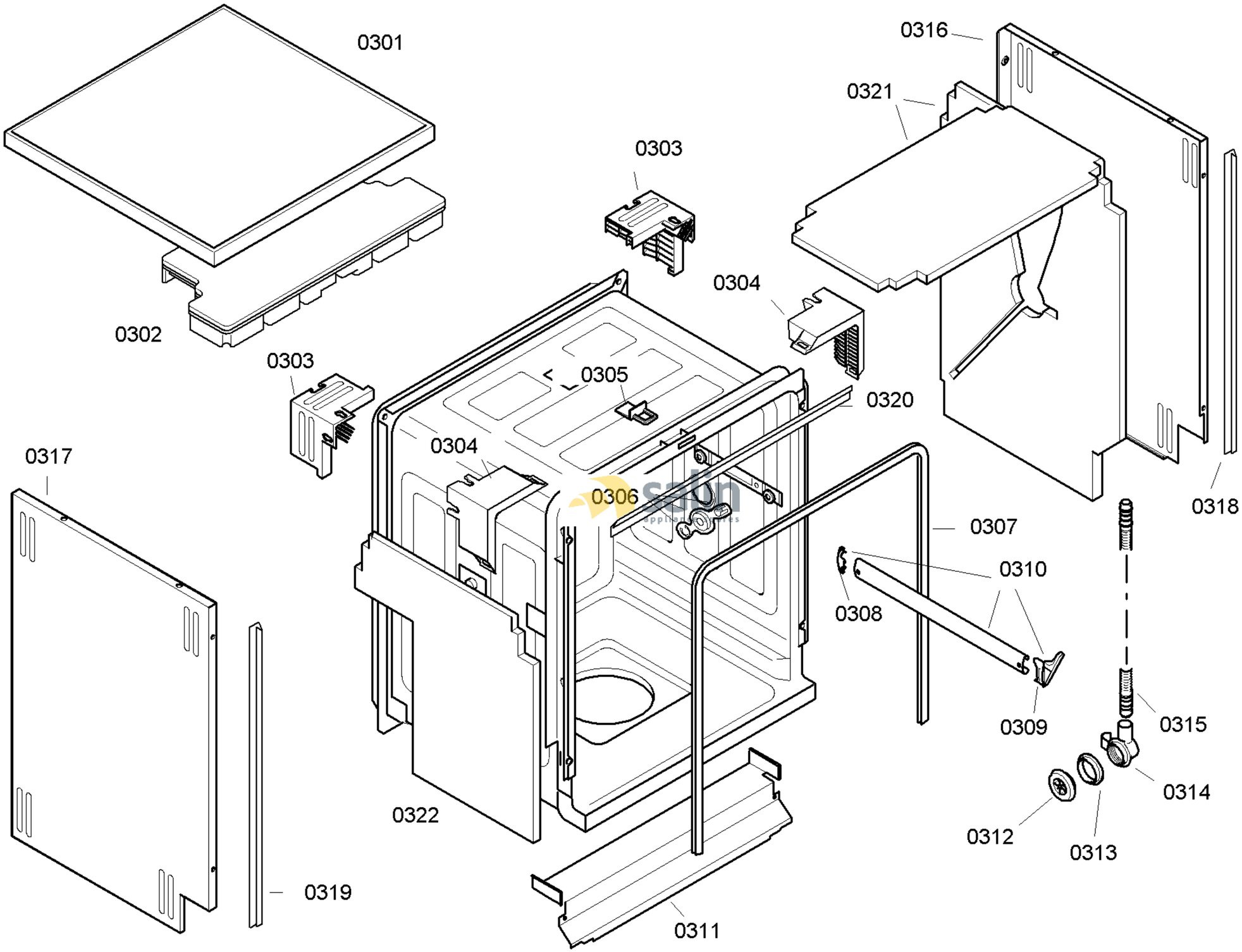

58300000119611 aet 000 c 3/6

FAMILY : SGS43E08II
MODEL NO: SGS43E08II/79
Check Position No/Part No or Replacement No

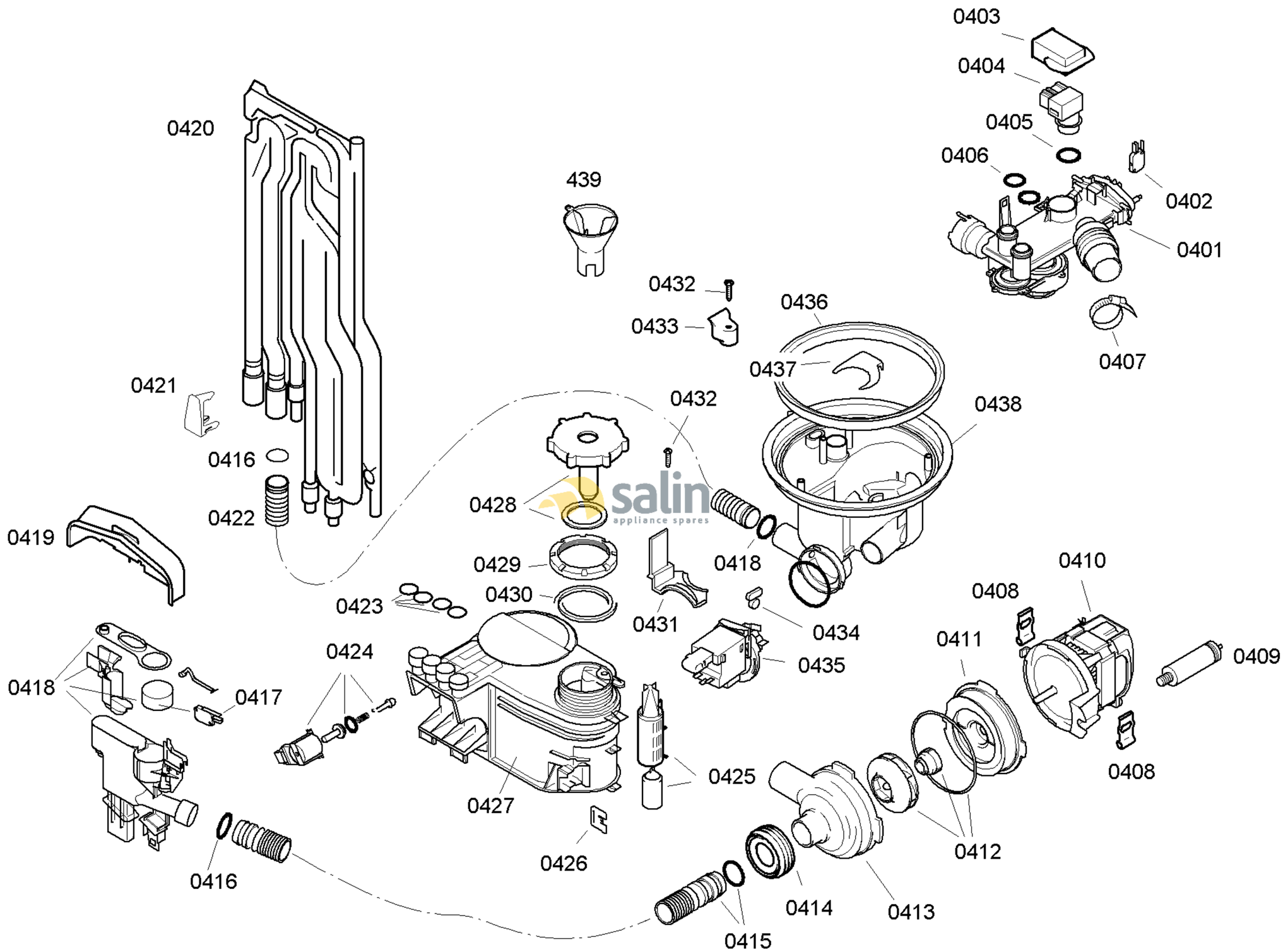

58300000119611 aet 000 c 4/6

FAMILY : SGS43E08II
MODEL NO: SGS43E08II/79
Check Position No/Part No or Replacement No

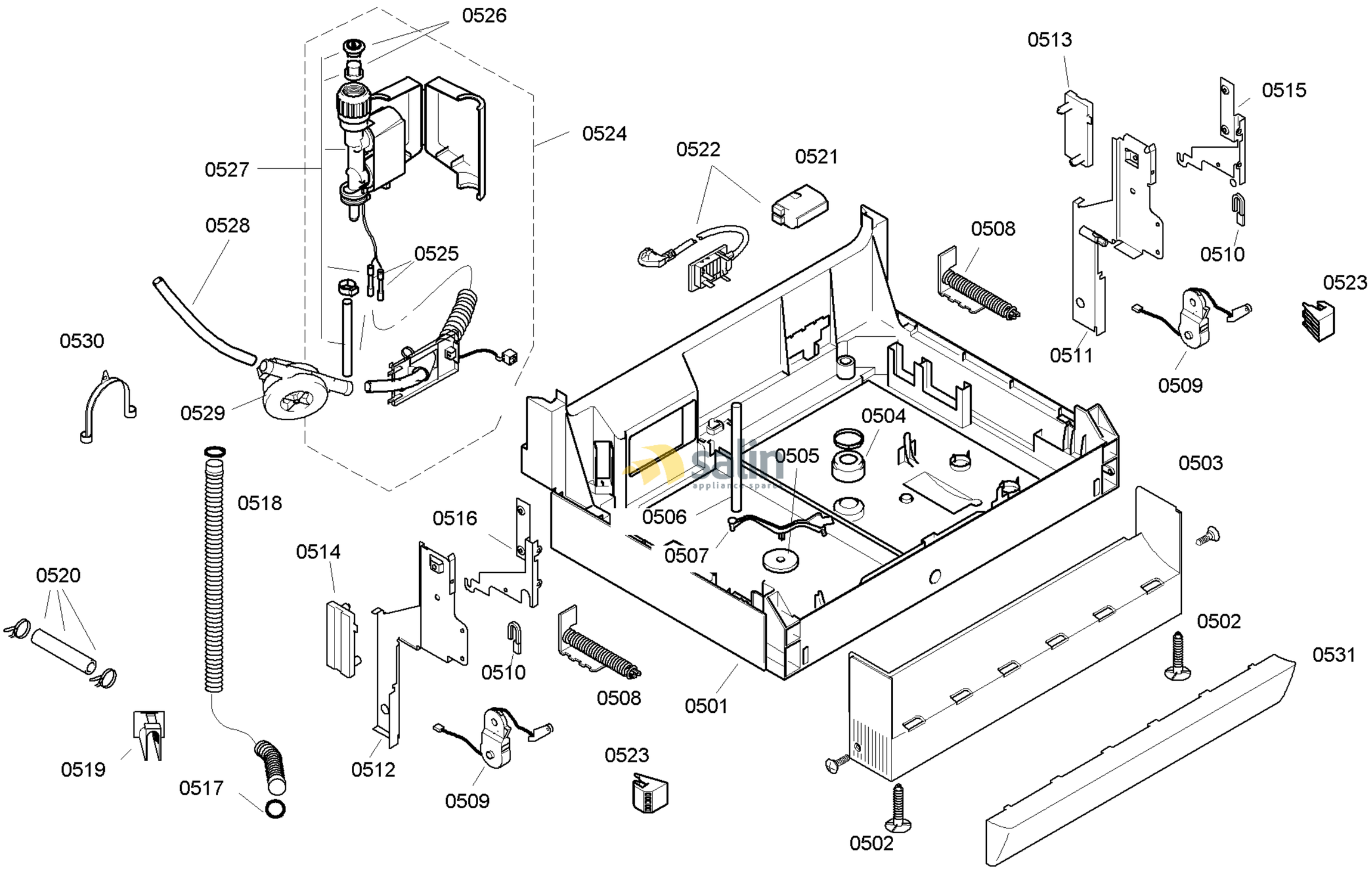

58300000119611 aet 000 c 5/6

FAMILY : SGS43E08II
MODEL NO: SGS43E08II/79
Check Position No/Part No or Replacement No

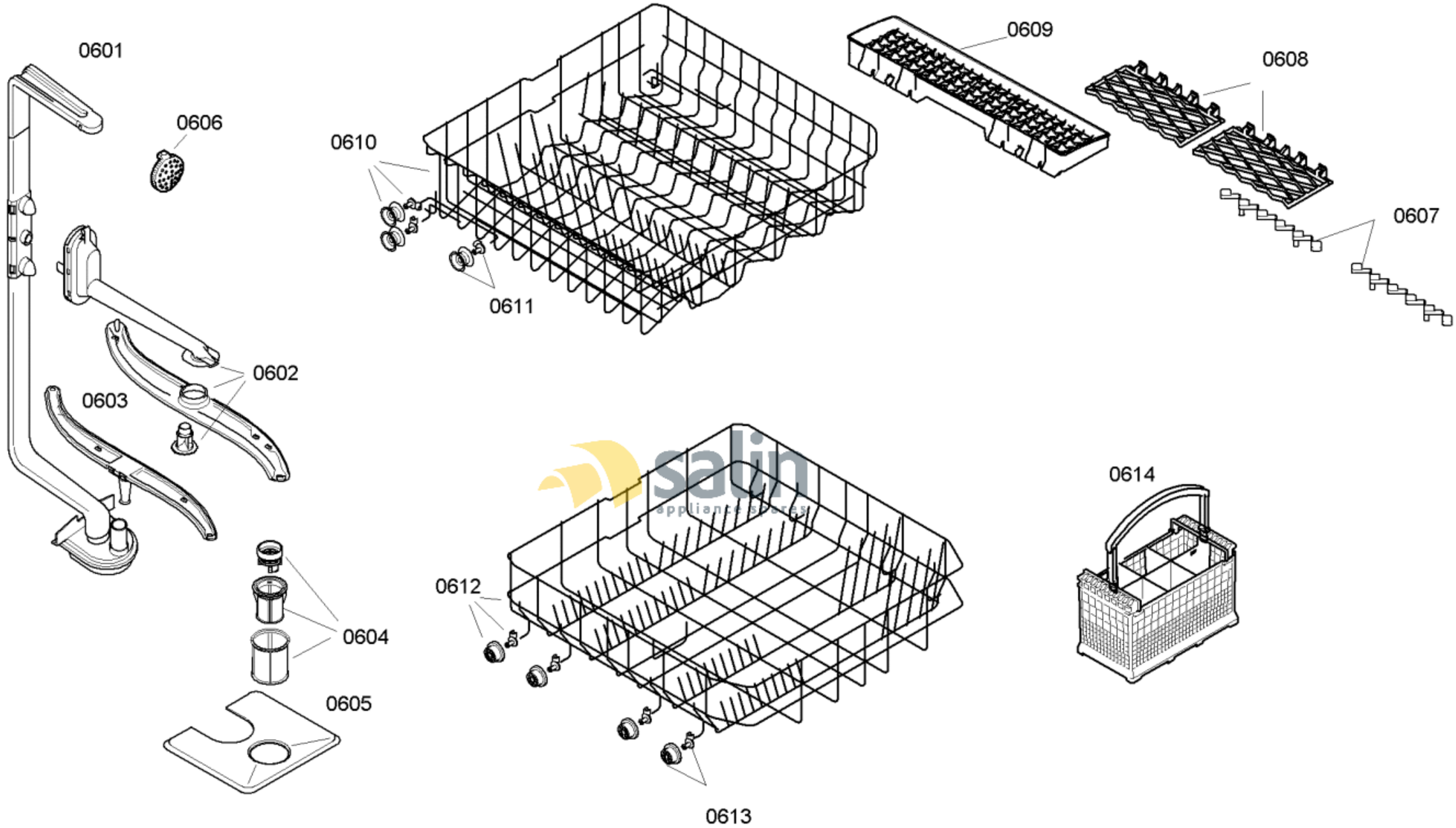

58300000119611 aet 000 c 6/6

FAMILY : SGS43E08II

MODEL NO: SGS43E08II/79

Check Position No/Part No or Replacement No